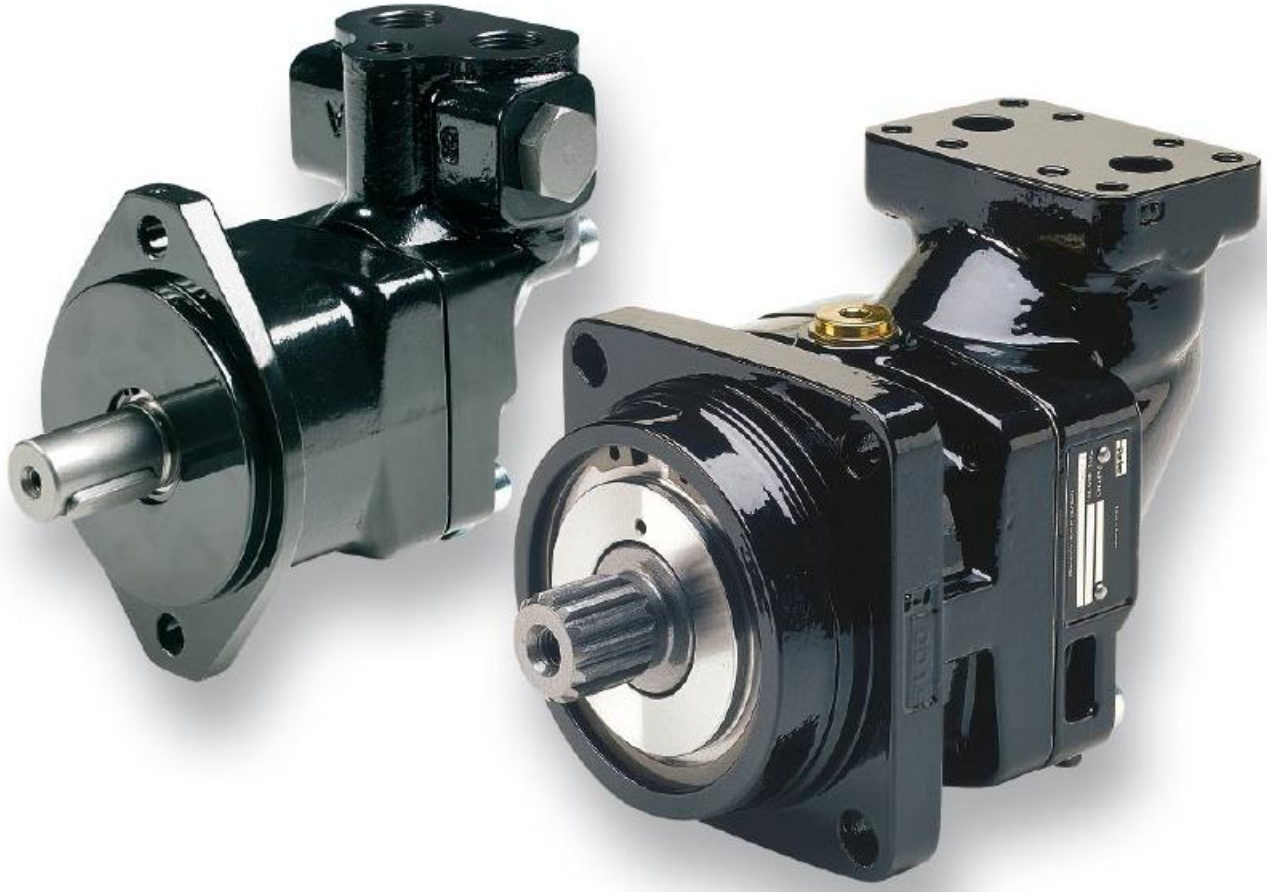

Hydraulic Motor/Pump

Series F11/F12
Fixed Displacement

aerospace
climate control
electromechanical
filtration
fluid & gas handling
hydraulics
pneumatics
process control
sealing & shielding

Parker

ENGINEERING YOUR SUCCESS.

Basic formulas for hydraulic motors

Flow (q)

$$q = \frac{D \times n}{1000 \times \eta_v} \text{ [l/min]}$$

Torque (M)

$$M = \frac{D \times \Delta p \times \eta_{hm}}{63} \text{ [Nm]}$$

Power (P)

$$P = \frac{q \times \Delta p \times \eta_t}{600} \text{ [kW]}$$

D - displacement [cm^3/rev]
n - shaft speed [rpm]
η_v - volumetric efficiency
Δp - differential pressure [bar] (between inlet and outlet)
η_{hm} - mechanical efficiency
η_t - overall efficiency ($\eta_t = \eta_v \times \eta_{hm}$)

Conversion factors

1 kg ..... 2.20 lb
1 N ..... 0.225 lbf
1 Nm ..... 0.738 lbf ft
1 bar ..... 14.5 psi
1 l ..... 0.264 US gallon
1 cm^3 ..... 0.061 cu in
1 mm ..... 0.039 in
$^9/_5$ °C + 32 ..... 1 °F
1 kW ..... 1.34 hp

Content

Content	Page
General information	4
F11 cross section	4
F12 cross sections	5
Specifications	6
Ordering codes	7
F11-CETOP	7
F11-ISO	8
F11-SAE	9
F12-ISO	10
F12-Cartridge, CETOP	11
F12-SAE	12
Preferred versions F11/F12	13
Technical information	
Bearing life	14
Efficiency	15
Noise level	15
Selfpriming speed and required inlet pressure	16
Installation dimensions	
F11-5 CETOP	17
F11-6, -10 CETOP	18
F11-12 CETOP	19
F11-14 CETOP	20
F11-19 CETOP	21
F11-10 ISO	22
F11-12 ISO	23
F11-14 ISO	24
F11-10 SAE	25
F11-12 SAE	26
F11-14 SAE	27
F11-19 SAE	28
F12-30, -40, -60, -80, -90, -110 and -125 ISO	30
F12-30, -40, -60, -80, -90, -110 and -125 Cartridge	32
F12-30, -40, -60, -80, -90, -110 and -125 SAE 4 bolt flange	34
F12-30, -40, and -60 2 bolt flange	36
F12-150 CETOP	38
F12-150 SAE	39
F12-250 SAE	40
Technical information	
F11 in saw motor applications	41
Series F11iP	41
F11 and F12 fan motors	43
Flushing valves for F12 motors	44
FV13 flushing valve block	45
SR pressure relief / make-up valve	46
SP super shockless, pressure relief valve	49
Speed sensor	51
Installation information	
Direction of rotation	52
Hydraulic fluids	52
Operating temperature	52
F11/F12 in series operation	52
Viscosity	53
Filtration	53
Case pressure	53
Case drain connections	54
Before start-up	54

F11 and F12 are bent axis, fixed displacement heavy-duty motor/pump series. They can be used in numerous applications in both open and closed loop circuits.

- Series F11 is available in the following frame sizes and versions:
  - F11-5, -6, -10, -12, -14 and -19 with CETOP mounting flange and shaft end
  - F11-10, -12 and -14 with ISO flange and shaft
  - F11-10, -12, -14 and -19 with SAE flange and shaft
- Series F12 conforms to current ISO and SAE mounting flange and shaft end configurations. A very compact cartridge version is also available.
- Thanks to the unique spherical piston design, F11/F12 motors can be used at unusually high shaft speeds. Operating pressures to 480 bar provides for the high output power capability.
- The 40° angle between shaft and cylinder barrel allows for a very compact, lightweight motor/pump.
- The laminated piston ring offers important advantages such as low internal leakage and thermal shock resistance.
- The pump version has highly engineered valve plates for increased selfpriming speed and low noise, available with left and right hand rotation.
- The F11/F12 motors produce very high torque at start-up as well as at low speeds.
- Our unique timing gear design synchronizes shaft and cylinder barrel, making the F11/F12 very tolerant to high 'G' forces and torsional vibrations.
- Heavy duty roller bearings permit substantial external axial and radial shaft loads.
- The F11's and F12's have a simple and straight-forward design with very few moving parts, making them very reliable motors/pumps.
- The unique piston locking, timing gear and bearing set-up as well as the limited number of parts add up to a very robust design with long service life and, above all, proven reliability.

F11 cross section

1. Barrel housing
2. Valve plate
3. Cylinder barrel
4. Guide spacer with O-rings
5. Timing gear
6. Roller bearing
7. Bearing housing
8. Shaft seal
9. Output/input shaft
10. Piston with laminated piston ring

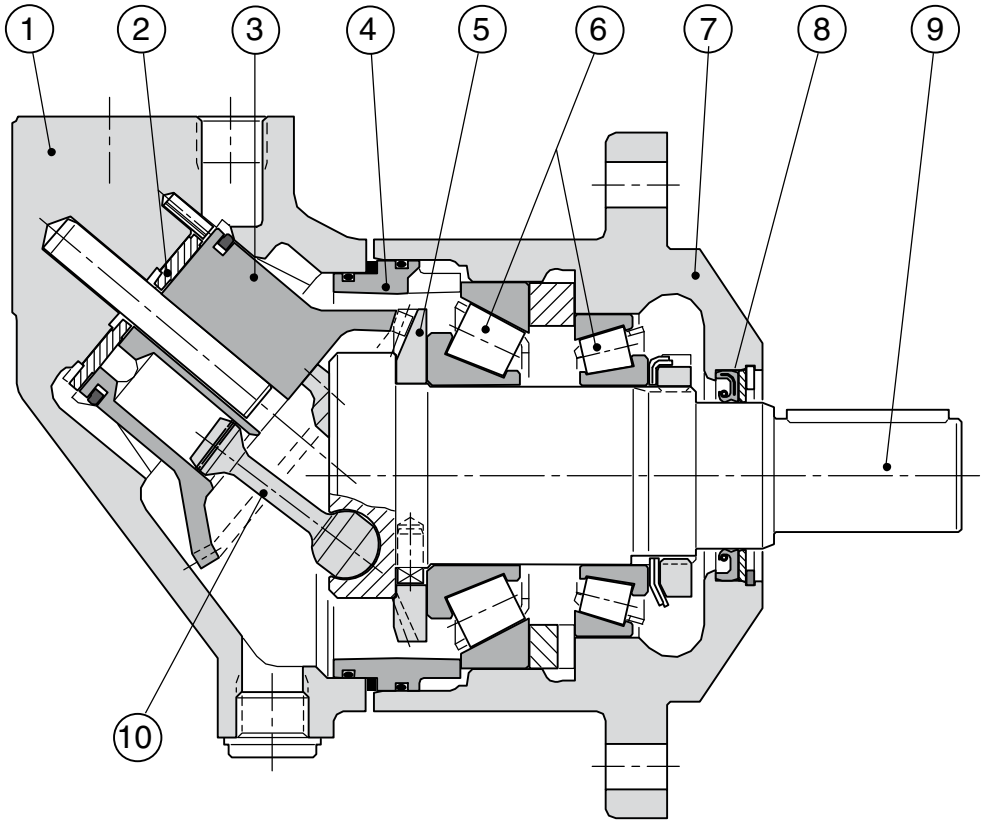

F12 cross sections

F12-30, -40, -60, -80 and -90
(F12-60 shown)

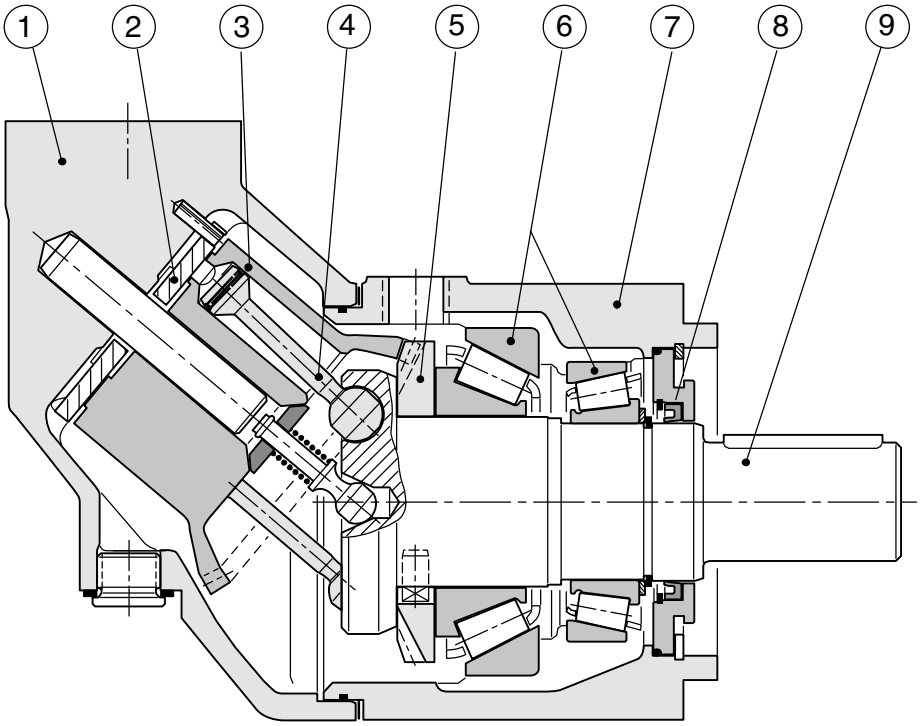

Legend:

1. Barrel housing
2. Valve plate
3. Cylinder barrel
4. Piston with piston ring
5. Timing gear
6. Tapered roller bearings
7. Bearing housing
8. Shaft seal
9. Output/input shaft
10. Port E (F12-110 and -125)
11. Needle bearings (F12-110 and -125)

F12-110 and -125
(F12-110 shown)

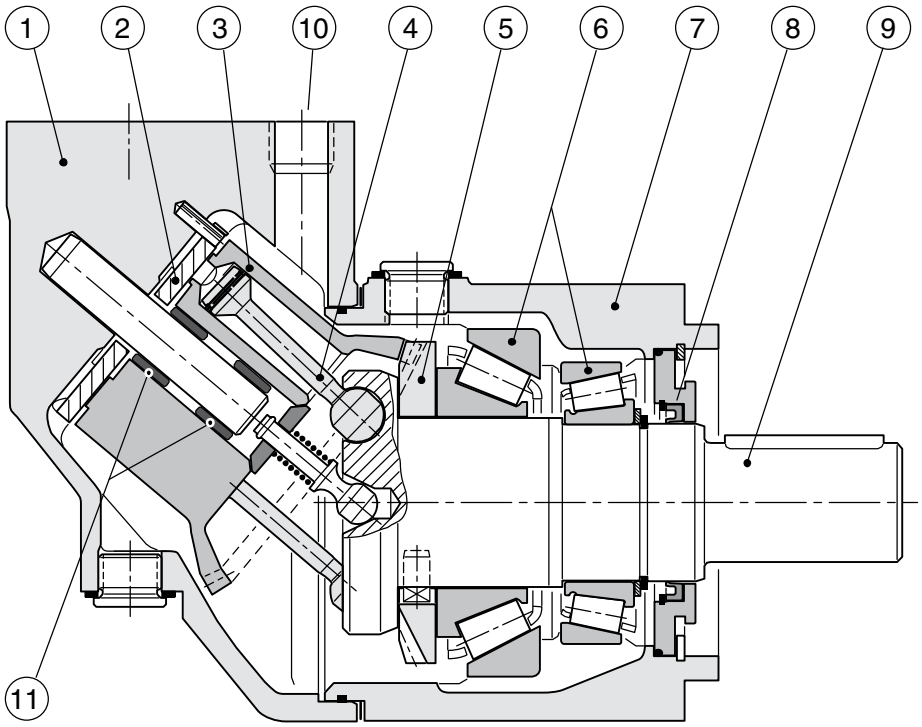

Frame size F11	**-5**	**-6**	**-10**	**-12**	**-14**	**-19**
Displacement [cm³/rev]	4.9	6.0	9.8	12.5	14.3	19.0
Operating pressure						
max intermittent[1] [bar]	420	—	—	—	—	420
max continuous [bar]	350	—	—	—	—	350
Motor operating speed [rpm]						
max intermittent[1]	14 000	11 200	11 200	10 300	9 900	8 900
max continuous	12 800	10 200	10 200	9 400	9 000	8 100
min continuous	50	—	—	—	—	50
Max pump selfpriming speed[2]						
L or R function; max [rpm]	4 600	–	4 200	3 900	3 900	3 500
Motor input flow						
max intermittent[1] [l/min]	69	67	110	129	142	169
max continuous [l/min]	63	61	100	118	129	154
Main circuit temp.[3], max [°C]	80	—	—	—	—	80
min [°C]	-40	—	—	—	—	-40
Theoretical torque at 100 bar [Nm]	7.8	9.5	15.6	19.8	22.7	30.2
Mass moment of inertia						
($x10^{-3}$) [kg m²]	0.16	0.39	0.39	0.40	0.42	1.1
Weight [kg]	4.7	7.5	7.5	8.2	8.3	11

Frame size F12	**-30**	**-40**	**-60**	**-80**	**-90**	**-110**	**-125**	**-150**	**-250**
Displacement [cm³/rev]	30.0	40.0	59.8	80.4	93.0	110.1	125.0	150	242
Operating pressure									
max intermittent[1] [bar]	480	—	—	480	420	480	480	420	420
max continuous [bar]	420	—	—	420	350	420	420	350	350
Motor operating speed [rpm]									
max intermittent[1]	7 300	6 700	5 800	5 300	5 000	4 800	4 600	3 500	3 000
max continuous	6 700	6 100	5 300	4 800	4 600	4 400	4 200	3 200	2 700
min continuous	50	—	—	—	—	—	—	—	50
Max pump selfpriming speed[2]									
L or R function; max [rpm]	3150	2870	2500	2300	2 250	2200	2 100	1 700	1 500
Motor input flow									
max intermittent[1] [l/min]	219	268	347	426	465	528	575	525	726
max continuous [l/min]	201	244	317	386	428	484	525	480	653
Main circuit temp.[3], max [°C]	80	—	—	—	—	—	—	—	80
min [°C]	-40	—	—	—	—	—	—	—	-40
Theoretical torque at 100 bar [Nm]	47.6	63.5	94.9	127.6	147.6	174.8	198.4	238.1	384.1
Mass moment of inertia									
($x10^{-3}$) [kg m²]	1.7	2.9	5	8.4	8.4	11.2	11.2	40	46
Weight [kg]	12	16.5	21	26	26	36	36	70	77

1) Intermittent: max 6 seconds in any one minute.
2) Selfpriming speed valid at sea level.
3) See also installation information, operating temperature.

F11 — [ ] — [ ] [ ] — [ ] [ ] — [ ] — [ ] — [ ] — [ ]

F11-CETOP Frame size | Function | Main ports | Mounting flange | Shaft seal | Shaft | Version number | Option page 43 | Option page 51

Frame size	
Code	**Displacem.** (cm^3/rev)
005	4.9
006	6.0
010	9.8
012	12.5
014	14.3
019	19.0

Version number
(assigned for special versions)

Frame size		5	6	10	12	14	19
Code	**Function**						
M	Motor	x	x	x	-	-	x
H	Motor, high pressure	x	-	x	x	x	x
S	Motor, high speed	-	-	(x)	-	-	(x)
R	Pump, clockwise rot'n	(x)	-	(x)	(x)	(x)	(x)
L	Pump, counter clockw.	(x)	-	(x)	(x)	(x)	(x)

For other versions, contact Parker Hannifin

Frame size		5	6	10	12	14	19
Code	**Main ports**						
B	BSP threads	x	x	x	x	x	x
U	SAE, UN threads	(x)	-	(x)	-	-	(x)

Frame size		5	6	10	12	14	19
Code	**Mounting flange**						
C	CETOP flange	x	x	x	x	x	x
W	Saw motor flange	-	-	(x)	(x)	(x)	(x)

Frame size		5	6	10	12	14	19
Code	**Shaft seal**						
N	NBR[1], low pressure	(x)	(x)	(x)	-	-	(x)
V	FPM[2], high pressure, high temperature	x	x	x	x	x	x
S	FPM[2], saw motor	-	(x)	(x)	-	-	(x)

Frame size		5	6	10	12	14	19
Code	**Shaft**						
K	Metric key	x	x	x	x	x	x
K	Metric key, 25 mm[3]	-	(x)	(x)	(x)	-	-
D	Spline, DIN 5480	(x)	(x)	(x)	(x)	(x)	(x)
S	Spline, SAE	(x)	-	-	-	-	-

Frame size		5	6	10	12	14	19
Code	**Option**						
MVR	Make-up valve clockwise rotation	-	-	(x)	(x)	(x)	(x)
MVL	Make-up valve counter clockwise rotation	-	-	(x)	(x)	(x)	(x)

Frame size		5	6	10	12	14	19
Code	**Option**						
P	Prepared for speed sensor	-	-	-	(x)	(x)	(x)

x: Available (x): Optional – : Not available

1) NBR - Nitrile rubber
2) FPM - Fluor rubber
3) Special version number 349

Parker Hannifin
Pump and Motor Division
Trollhättan, Sweden

F11 — [ ] — [ ] [ ] — [ ] [ ] — [ ] — [ ] — [ ] — [ ]

F11-ISO

Frame size | Function | Main ports | Mounting flange | Shaft seal | Shaft | Version number | Option page 43 | Option page 51

Frame size	
Code	**Displacem.** (cm^3/rev)
010	9.8
012	12.5
014	14.3

Version number
(assigned for special versions)

Frame size		10	12	14
Code	**Function**			
M	Motor	x	-	-
H	Motor, high pressure	x	x	x
S	Motor, high speed	(x)	-	-
R	Pump, clockwise rot'n	(x)	(x)	(x)
L	Pump, counter clockw.	(x)	(x)	(x)

Frame size		10	12	14
Code	**Main ports**			
F	Metric threads	x	x	x
B	BSP threads	(x)	(x)	(x)

Frame size		10	12	14
Code	**Mounting flange**			
I	ISO flange	x	x	x

Frame size		10	12	14
Code	**Shaft seal**			
V	FPM[1], high pressure, high temperature	x	x	x
S	FPM[1], saw motor	(x)	-	-

Frame size		10	12	14
Code	**Shaft**			
K	Metric key	x	x	x
D	Spline, DIN 5480	(x)	(x)	(x)
K	Metric key, 25 mm[2]	(x)	(x)	-

Frame size		10	12	14
Code	**Option**			
MVR	Make-up valve clockwise rotation	(x)	(x)	(x)
MVL	Make-up valve counter clockwise rotation	(x)	(x)	(x)

Frame size		10	12	14
Code	**Option**			
P	Prepared for speed sensor	-	(x)	(x)

x: Available (x): Optional – : Not available
1) FPM - Fluor rubber
2) Special version number 349

Parker Hannifin
Pump and Motor Division
Trollhättan, Sweden

F11	—		—			—			—		—		—		—	
F11-SAE		Frame size		Function	Main ports		Mounting flange	Shaft seal		Shaft		Version number		Option page 43		Option page 51

Frame size	
Code	**Displacem.** (cm^3/rev)
010	9.8
012	12.5
014	14.3
019	19.0

Version number
(assigned for special versions)

Frame size		10	12	14	19
Code	**Function**				
M	Motor	x	-	-	x
H	Motor, high pressure	x	x	x	x
S	Motor, high speed	(x)	-	-	(x)
R	Pump clockwise rot'n	(x)	(x)	(x)	(x)
L	Pump counter clockw.	(x)	(x)	(x)	(x)

For other versions, contact Parker Hannifin

Frame size		10	12	14	19
Code	**Main ports**				
U	SAE, UN threads	x	x	x	x
B	BSP threads	(x)	(x)	-	(x)

Frame size		10	12	14	19
Code	**Mounting flange**				
S	SAE flange	x	x	x	x

Frame size		10	12	14	19
Code	**Option**				
MVR	Make-up valve clockwise rotation	(x)	(x)	(x)	(x)
MVL	Make-up valve counter clockwise rotation	(x)	(x)	(x)	(x)

Frame size		10	12	14	19
Code	**Shaft**				
T	SAE key	-	-	x	x
S	SAE spline	(x)	(x)	(x)	(x)
K	Metric key	x	x	-	-
K	Metric key, 25 mm[3)]	(x)	(x)	-	-

Frame size		10	12	14	19
Code	**Shaft seal**				
N	NBR[1)], low pressure	(x)	-	-	(x)
V	FPM[2)], high pressure, high temperature	x	x	x	x
S	FPM[2)], saw motor	(x)	-	-	(x)

Frame size		10	12	14	19
Code	**Option**				
P	Prepared for speed sensor	-	(x)	(x)	(x)

x: Available (x): Optional – : Not available
1) NBR - Nitrile rubber
2) FPM - Fluor rubber
3) Special version number 349

Parker Hannifin
Pump and Motor Division
Trollhättan, Sweden

F12	—	☐	—	☐	☐	—	☐	☐	—	☐	—	☐	—	☐	—	☐
F12-ISO		Frame size		Function	Main ports		Mounting flange	Shaft seal		Shaft		Version number		Option page 43-44		Option page 51

Frame size	
Code	**Displacem.** (cm^3/rev)
030	30.0
040	40.0
060	59.8
080	80.4
090	93.0
110	110.1
125	125.0

Version number
(assigned for special versions)

Frame size			30	40	60	80	90	110	125
Code	**Shaft**								
D	DIN spline	Optional	(x)	(x)	(x)	(x)	(x)	(x)	(x)
Z	" "	Optional	(x)	(x)	(x)	(x)	(x)	(x)	(x)
K	Metric key	Standard	x	x	x	x	x	x	x
P	" "	Optional	(x)	-	-	-	-	-	-

Frame size		30	40	60	80	90	110	125
Code	**Function**							
M	Motor	x	x	x	x	x	x	x
	Pump:							
L	counter clockw.	(x)	(x)	(x)	(x)	(x)	(x)	(x)
R	clockwise	(x)	(x)	(x)	(x)	(x)	(x)	(x)

Frame size		30	40	60	80	90	110	125
Code	**Option**							
L01	Integr. flushing valve	(x)	(x)	(x)	(x)	(x)	-3)	-3)
MVR	Make-up valve clockwise rotation	(x)	-	-	-	-	-	-
MVL	Make-up valve counter clockwise rotation	(x)	-	-	-	-	-	-

Frame size		30	40	60	80	90	110	125
Code	**Main ports**							
F	SAE 6000 psi flange	x	x	x	x	x	x	x

Frame size		30	40	60	80	90	110	125
Code	**Option**							
P	Prepared for speed sensor	(x)	(x)	(x)	(x)	(x)	(x)	(x)

Frame size		30	40	60	80	90	110	125
Code	**Shaft seal**							
N	NBR1), low pressure	(x)	(x)	(x)	(x)	(x)	(x)	(x)
V	FPM2), high temperature, high pressure	x	x	x	x	x	x	x

Frame size		30	40	60	80	90	110	125
Code	**Mounting flange**							
I	ISO flange	x	x	x	x	x	x	x

x : Available (x): Optional – : Not available

1) NBR - Nitrile rubber
2) FPM - Fluor rubber
3) F12-110 and -125: Accessory valve block (page 45)

F12 — [ ] — [ ] [ ] — [ ] [ ] — [ ] — [ ] — [ ] — [ ] — [ ]

Frame size | Function | Main ports | Mounting flange | Shaft seal | Shaft | Version number | Option page 43-44 | Option page 51

F12-Cartridge CETOP

Frame size	
Code	**Displacem.** (cm³/rev)
030	30.0
040	40.0
060	59.8
080	80.4
090	93.0
110	110.1
125	125.0
150	150.0

Version number
(assigned for special versions)

Frame size		30	40	60	80	90	110	125	150
Code	**Function**								
M	Motor	x	x	x	x	x	x	x	x
H	Motor, high pressure	-	-	-	-	-	-	-	(x)
	Pump:								
R	Clockwice	-	-	-	-	-	-	-	(x)
L	counter clockw.	-	-	-	-	-	-	-	(x)

Frame size		30	40	60	80	90	110	125	150
Code	**Main ports**								
F	SAE 6000 psi flange	x	x	x	x	x	x	x	x

Frame size		30	40	60	80	90	110	125	150
Code	**Mounting flange**								
C	Cartridge	x	x	x	x	x	x	x	-
C	CETOP	-	-	-	-	-	-	-	x

Frame size			30	40	60	80	90	110	125	150
Code	**Shaft**									
C	DIN spline	Standard	x	x	x	x	x	x	x	-
K	Metric key	Optional	(x)	-	(x)	(x)	(x)	-	-	x
X	Metric key[4]	Optional	-	(x)	-	-	-	-	-	-
X	Spline [5] DIN 5480		-	-	-	-	-	x	x	-
D	Spline DIN 5480		-	-	-	-	-	-	-	(x)

Frame size		30	40	60	80	90	110	125	150
Code	**Option**								
L01	Integr. flushing valve	(x)	(x)	(x)	(x)	(x)	-[3]	-[3]	-
MVR	Make-up valve clockwise rotation	(x)	-	-	-	-	-	-	-
MVL	Make-up valve counter clockwise rotation	(x)	-	-	-	-	-	-	-

Frame size		30	40	60	80	90	110	125	150
Code	**Option**								
P	Prepared for speed sensor	x	(x)	(x)	(x)	(x)	x	x	-

Frame size		30	40	60	80	90	110	125	150
Code	**Shaft seal**								
N	NBR[1], low pressure	(x)	(x)	(x)	(x)	(x)	(x)	(x)	(x)
V	FPM[2], high temperature, high pressure	x	x	x	x	x	x	x	x

x: Available (x): Optional – : Not available

1) NBR - Nitrile rubber
2) FPM - Fluor rubber
3) F12-110 and -125: Accessory valve block (page 45)
4) Special version number 264
5) Special version number 326

Parker Hannifin
Pump and Motor Division
Trollhättan, Sweden

F12	—	☐	—	☐	☐	—	☐	☐	—	☐	—	☐	—	☐	—	☐
F12-SAE		Frame size		Function	Main ports		Mounting flange	Shaft seal		Shaft		Version number		Option page 43-44		Option page 51

Frame size	
Code	**Displacem.** (cm³/rev)
030	30.0
040	40.0
060	59.8
080	80.4
090	93.0
110	110.1
125	125.0
150	150.0
250	242.0

Version number
(assigned for special versions)

Frame size			30	40	60	80	90	110	125	150	250
Code	**Shaft**										
S	SAE spline	Optional	(x)	(x)	(x)	(x)	(x)	(x)	(x)	(x)	(x)
U	" "	Optional	-	-	-	(x)	(x)	-	-	-	-
T	SAE key	Standard	x	x	x	x	x	x	x	x	-
K	Metric key		-	-	-	-	-	-	-	(x)	x
F	SAE spline		-	-	-	-	-	-	-	-	(x)
D	Spline, DIN 5480		-	-	-	-	-	-	-	-	(x)

Frame size		30	40	60	80	90	110	125	150	250
Code	**Function**									
M	Motor	x	x	x	x	x	x	x	x	-
H	Motor, high pressure	-	-	-	-	-	-	-	(x)	-
Q	Motor	-	-	-	-	-	-	-	-	x
	Pump:									
L	counter clockw.	(x)	(x)	(x)	(x)	(x)	(x)	(x)	(x)	(x)
R	clockwise	(x)	(x)	(x)	(x)	(x)	(x)	(x)	(x)	(x)

Frame size		30	40	60	80	90	110	125	150	250
Code	**Option**									
L01	Integr. flushing valve	(x)	(x)	(x)	(x)	(x)	-[3]	-[3]	-	-
MVR	Make-up valve clockwise rotation	(x)	-	-	-	-	-	-	-	-
MVL	Make-up valve counter clockwise rotation	(x)	-	-	-	-	-	-	-	-

Frame size		30	40	60	80	90	110	125	150	250
Code	**Main ports**									
S	SAE 6000 psi flange	x	x	x	x	x	x	x	-	-
U	SAE, UN threads	(x)	(x)	(x)	(x)	(x)	(x)	(x)	-	-
F	SAE 6000 psi flange[4]	-	-	-	-	-	-	-	x	x

Frame size		30	40	60	80	90	110	125	150	250
Code	**Option**									
P	Prepared for speed sensor	(x)	(x)	(x)	(x)	(x)	(x)	(x)	-	-

Frame size		30	40	60	80	90	110	125	150	250
Code	**Mounting flange**									
S	SAE 4 bolt	x	x	x	x	x	x	x	x	x
T	SAE 2 bolt	x	x	x	-	-	-	-	-	-

Frame size		30	40	60	80	90	110	125	150	250
Code	**Shaft seal**									
N	NBR[1], low pressure	(x)	(x)	(x)	(x)	(x)	(x)	(x)	(x)	-
V	FPM[2], high temperature, high pressure	x	x	x	x	x	x	x	x	x

x : Available (x): Optional – : Not available

1) NBR - Nitrile rubber
2) FPM - Fluor rubber
3) F12-110 and -125: Accessory valve block (page 45)
4) Metric threads

Preferred versions F11/F12

F11

Ordering Codes	Part number
F11-005-MB-CV-K-000-000-0	3707249
F11-005-HU-CV-K-000-000-0	3707308
F11-010-HU-CV-K-000-000-0	3707310
F11-010-MB-CV-K-000-000-0	3706030
F11-012-HF-IV-K-000-000-0	3786708
F11-012-HF-IV-K-349-000-0	3787600
F11-014-HB-CV-K-000-000-0	3782830
F11-014-HF-IV-K-000-000-0	3783287
F11-019-MB-CV-K-000-000-0	3707893
F11-019-HU-SV-T-000-000-0	3707314

F12

Ordering Codes	Part number
F12-030-MF-IV-K-000-000-0	3799844
F12-030-MS-SV-T-000-000-0	3799852
F12-030-MS-TV-S-000-000-0	3799616
F12-030-MF-IV-D-000-000-0	3799843
F12-030-MS-SV-S-000-000-0	3799855
F12-040-MS-SV-S-000-000-0	3799532
F12-040-MF-IV-K-000-000-0	3799526
F12-040-MS-SV-T-000-000-0	3799533
F12-040-MF-IV-D-000-000-0	3799525
F12-060-MF-IV-D-000-000-0	3799988
F12-060-MS-SV-S-000-000-0	3799998
F12-060-MF-IV-K-000-000-0	3799989
F12-060-MS-SV-T-000-000-0	3799999
F12-080-MF-IV-D-000-000-0	3780767
F12-080-MS-SV-T-000-000-0	3780784
F12-080-MF-IV-K-000-000-0	3780772
F12-080-MS-SV-S-000-000-0	3780783
F12-090-MS-SV-T-000-000-0	3785604
F12-090-MF-IV-D-000-000-0	3785518
F12-090-MF-IV-K-000-000-0	3785609
F12-090-MS-SV-S-000-000-0	3785875
F12-110-MS-SV-S-000-000-0	3781542
F12-110-MF-IV-K-000-000-0	3781534
F12-110-MF-IV-D-000-000-0	3781530
F12-110-MS-SV-T-000-000-0	3782636
F12-125-MS-SV-S-000-000-0	3785504
F12-125-MF-IV-D-000-000-0	3785866
F12-150-MF-SV-S-000-000-0	3787725
F12-150-MF-CV-K-000-000-0	3787721
F12-250-QF-SV-F-000	3787182
F12-250-QF-SV-K-000	3787184

Bearing life

General information

Bearing life can be calculated for that part of the load/ life curve (shown below) that is designated 'Bearing fatigue'. 'Rotating group fatigue and wear' and 'Other' caused by material fatigue, fluid contamination, etc. should also be taken into consideration when estimating the service life of a motor/pump in a specific application.

Bearing life calculations are mainly used when comparing different frame sizes. Bearing life, designated B_{10} (or L_{10}), is dependent of system pressure, operating speed, external shaft loads, fluid viscosity in the case, and fluid contamination level.

The B_{10} value means that 90% of the bearings survive, at a minimum, the number of hours calculated. Statistically, 50% of the bearings will survive at least five times the B_{10} life.

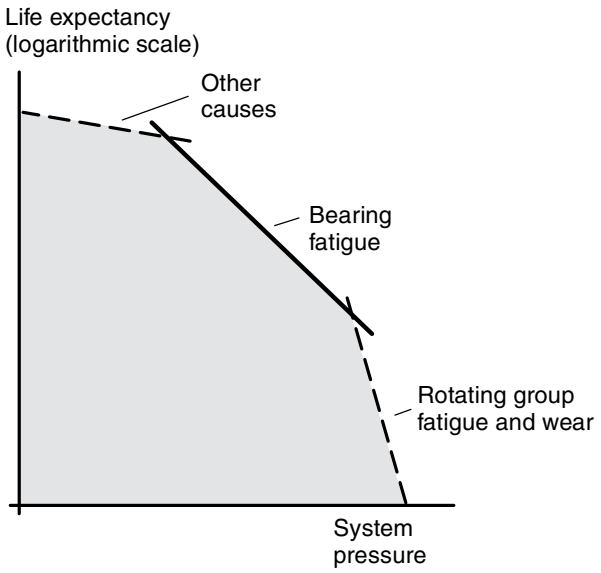

Hydraulic unit life versus system pressure.

Bearing life calculation

An application is usually governed by a certain duty or work cycle where pressure and speed vary with time during the cycle.

In addition, bearing life depends on external shaft forces, fluid viscosity in the case and fluid conta-mination.

Parker Hannifin has a computer program for calculating bearing life and will assist in determining F11 or F12 motor/pump life in a specific application.

Required information

When requesting a bearing life calculation from Parker Hannifin, the following information (where applicable) should be provided:

- A short presentation of the application
- F11 or F12 size and version
- Duty cycle (pressure and speed versus time at given displacements)
- Low system pressure
- Case fluid viscosity
- Life probability (B_{10}, B_{20}, etc.)
- Operating mode (pump or motor)
- Direction of rotation (L or R)
- External shaft loads (Forces, Gear, Belt, Cardan or none)

For forces please provide:

- Axial load, Fixed radial load, Bending moment, Rotating radial load and distance flange to radial load.

For Gear please provide:

- Pitch diameter, Pressure angle, Spiral angle, Distance flange – gearwheel (mid) and Gearwheel spiral direction (R or L).

For Belt please provide:

- Pretension, Coefficient of friction, Angle of contact, Distance flange – pulley (mid) and Diameter pulley.

For Cardan please provide:

- Shaft angle, Distance flange – first joint and distance between joints
- Angle of attack (α) as defined below

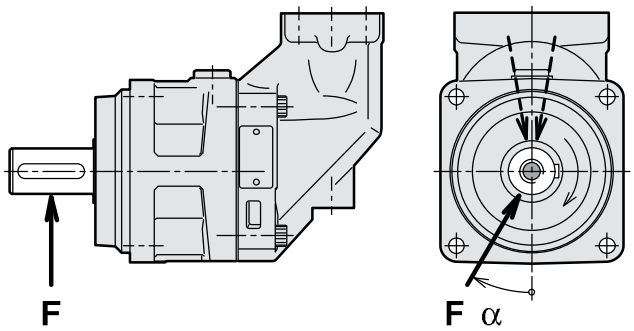

The direction (a) of the radial load is positive in the direction of rotation as shown.

To obtain maximum bearing life, the radial load should, in most cases, be located approximately at 170° (motor; R.H. rot'n) or 190° (pump; R.H rot'n).

Efficiency

Because of its high overall efficiency, driving a motor/ pump from series F11/F12 requires less fuel or electric power. Also, it allows the use of a small reservoir and heat exchanger, which in turn reduce cost, weight, and installation size.

The diagrams to the right shows volumetric and mechanical efficiencies of an F12-30.

Contact Parker Hannifin for efficiency information on a particular F11/F12 frame size that is being considered.

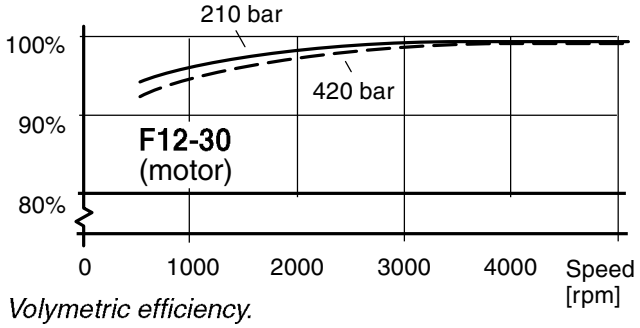

Volymetric efficiency.

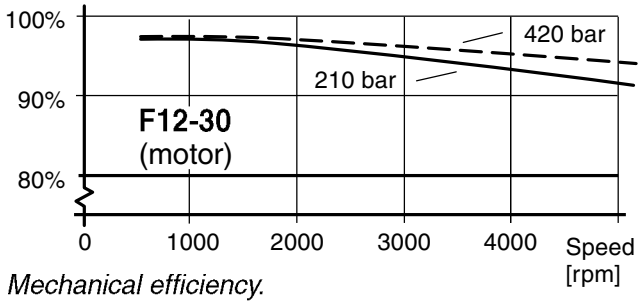

Mechanical efficiency.

Noise level

Series F11/F12 feature low noise levels from low to high speeds and pressures.

As an example, the diagram to the right shows the noise level of an F12-30.

The noise level is measured in a semi-anechoic room, 1 m behind the unit.

The noise level for a particular motor/pump may vary ±2 dB(A) compared to what is shown in the diagram.

NOTE: Noise information for F11/F12 frame sizes are available from Parker Hannifin.

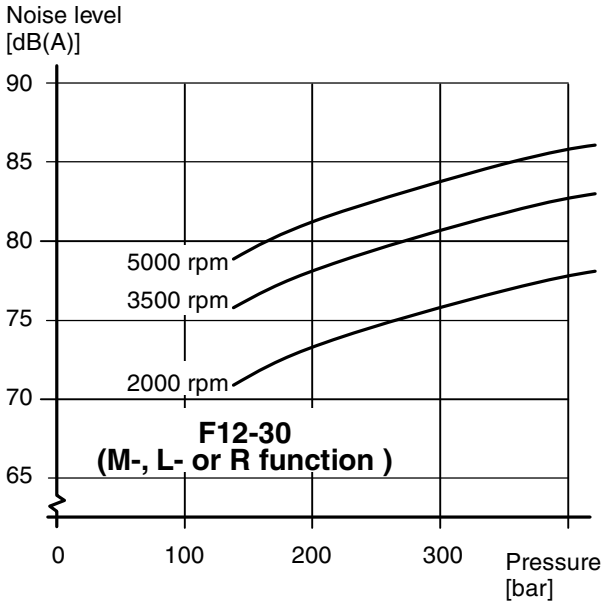

Selfpriming speed and required inlet pressure

Series F11
In pump applications, the F11 with function **L** (counter clockwise rotation) or **R** (clockwise rotation) is normally used. The L and R (pump) provide the highest self-priming speeds (see table) as well as the lowest noise level. The **M** (motor) function can also be used as a pump, in either direction, but at a lower selfpriming speed.

Operating above the selfpriming speed (refer to Diagram 1) requires increased inlet pressure.

As an example, at least 1.0 bar is needed when operating the F11-19-M as a pump at 3500 rpm. An F11 used as a motor (e.g. in a hydrostatic transmission), may sometimes operate as a pump at speeds above the selfpriming speed; this requires additional inlet pressure.

Insufficient inlet pressure can cause pump cavitation resulting in greatly increased pump noise and deteriorating performance.

Function	**L** or **R**	**M**	**H**
F11-5	4600	3800	3200
F11-10	4200	3100	2700
F11-12	3900	-	3000
F11-14	3900	-	3200
F11-19	3500	2400	2100
F12-150	1700	1300	1100
F12-250	1500	950	-

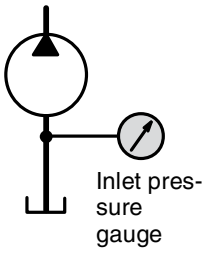

Series F12
When operating the F12 as a pump (with **L** or **R** valve plate) above the selfpriming speed, the inlet must be pressurized. Increased noise and deteriorating performance may otherwise be experienced.

Diagrams 2 and 3 show required pump inlet pressure vs. shaft speed.

The F12 motor (type **M** valve plate) sometimes operates as a pump e.g. when used in a propel transmission and the vehicle is going downhill.

Minimum required inlet pressure versus shaft speed is shown in the diagrams.

NOTE: Diagrams 1, 2 and 3 are valid at sea level.

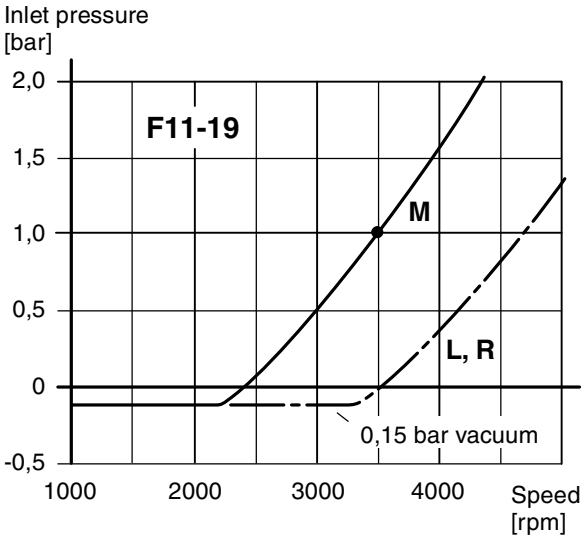

Diagram 1. Min required inlet pressure (F11-19).

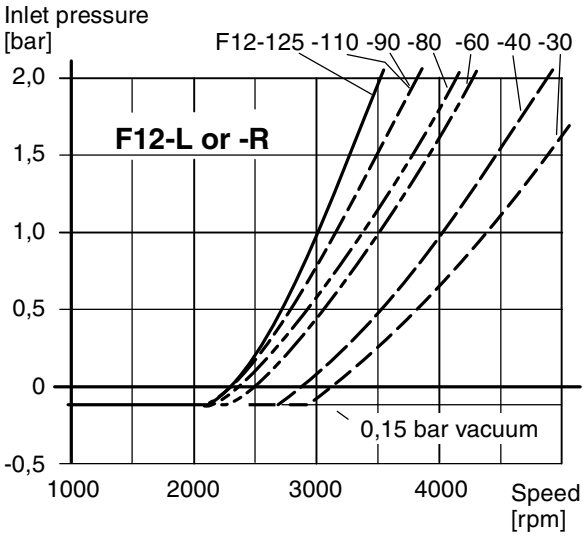

Diagram 2. Min. required pump (F12-L or -R) inlet press.

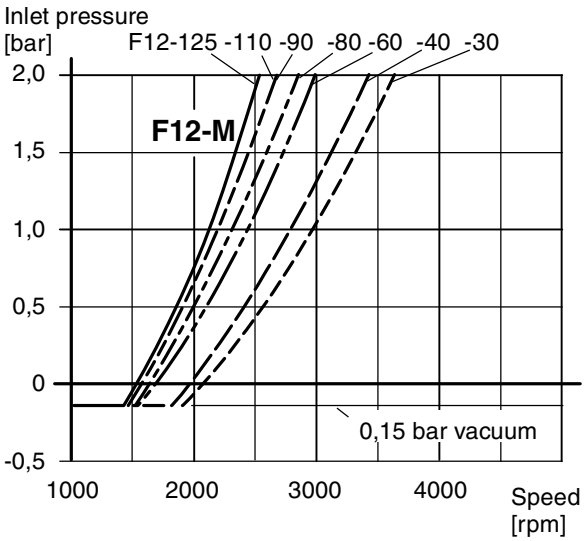

Diagram 3. Min. required motor (F12-M) inlet pressure.

F11-5
(CETOP versions)

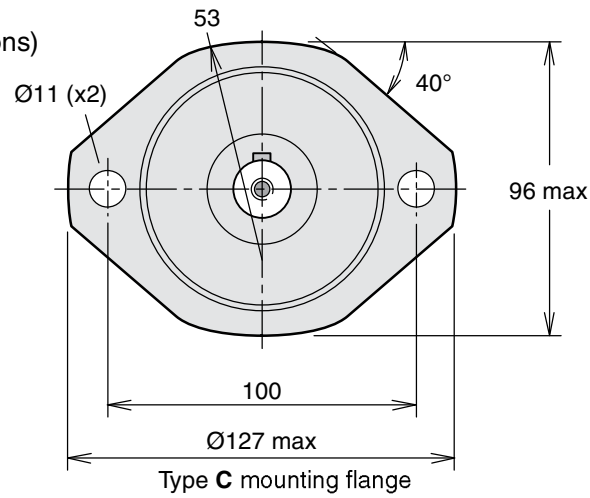

Type **C** mounting flange

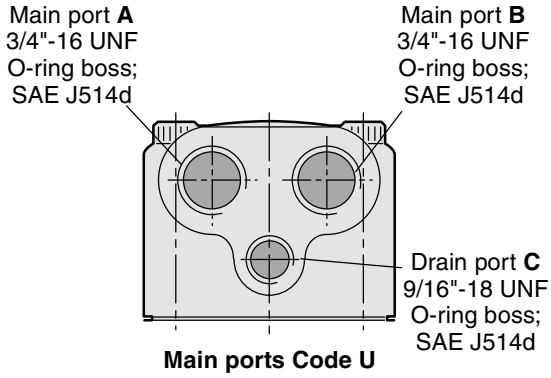

Main ports Code U

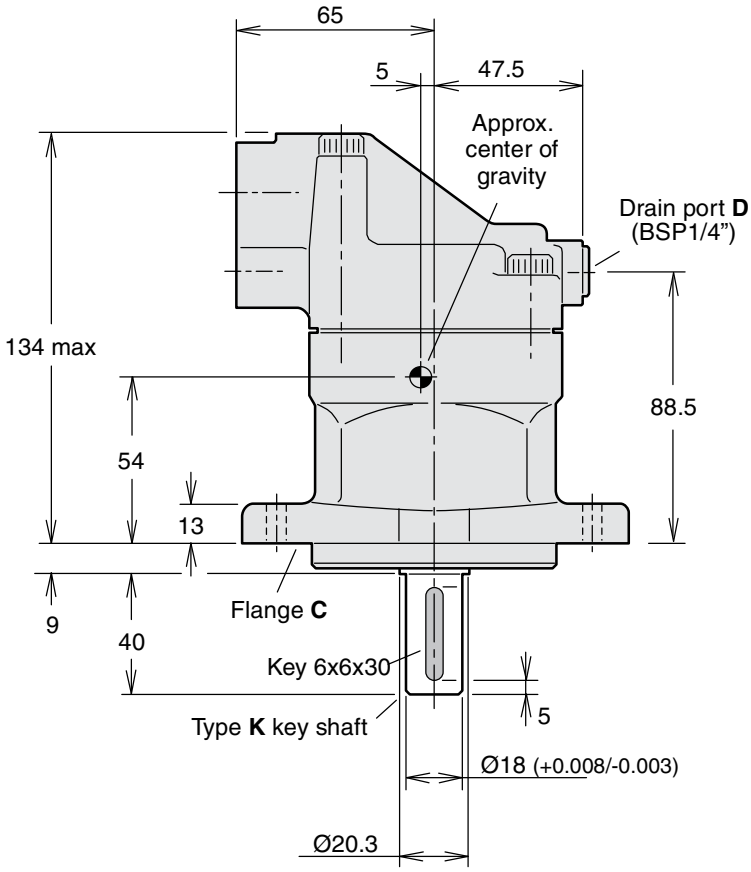

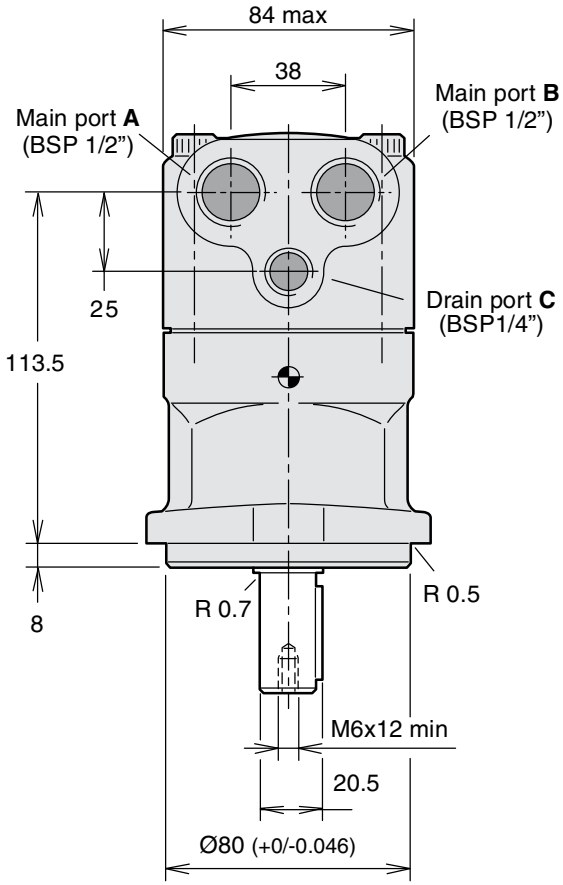

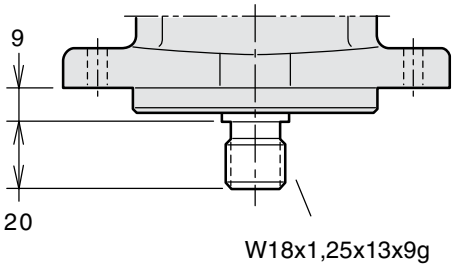

W18x1,25x13x9g
Type **D** spline shaft (DIN 5480)

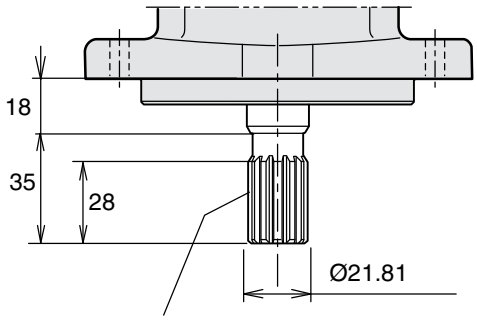

Type **S** spline shaft (13T16/32 DP)

F11-6, -10
(CETOP versions)

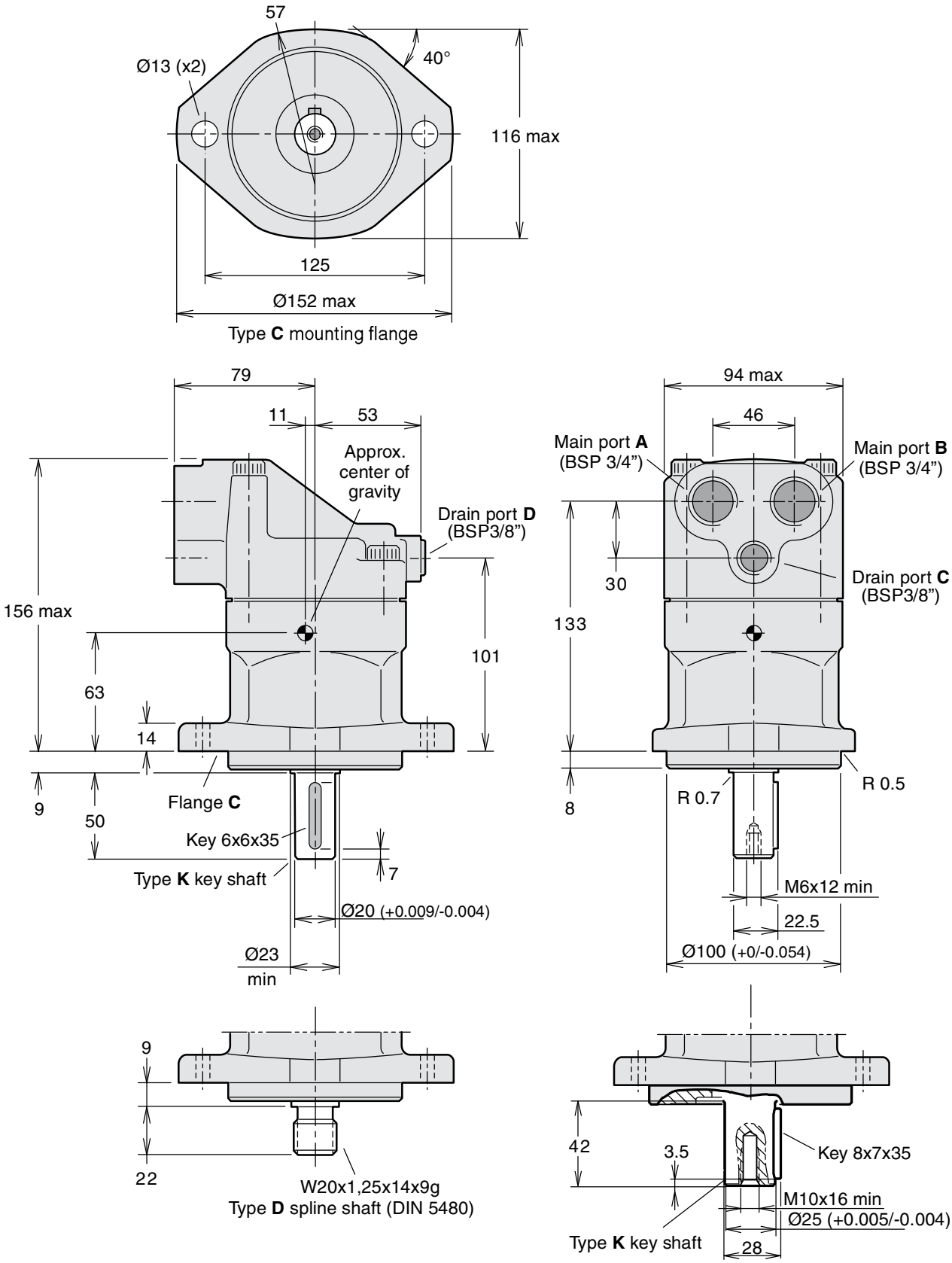

Parker Hannifin
Pump and Motor Division
Trollhättan, Sweden

F11-12
(CETOP versions)

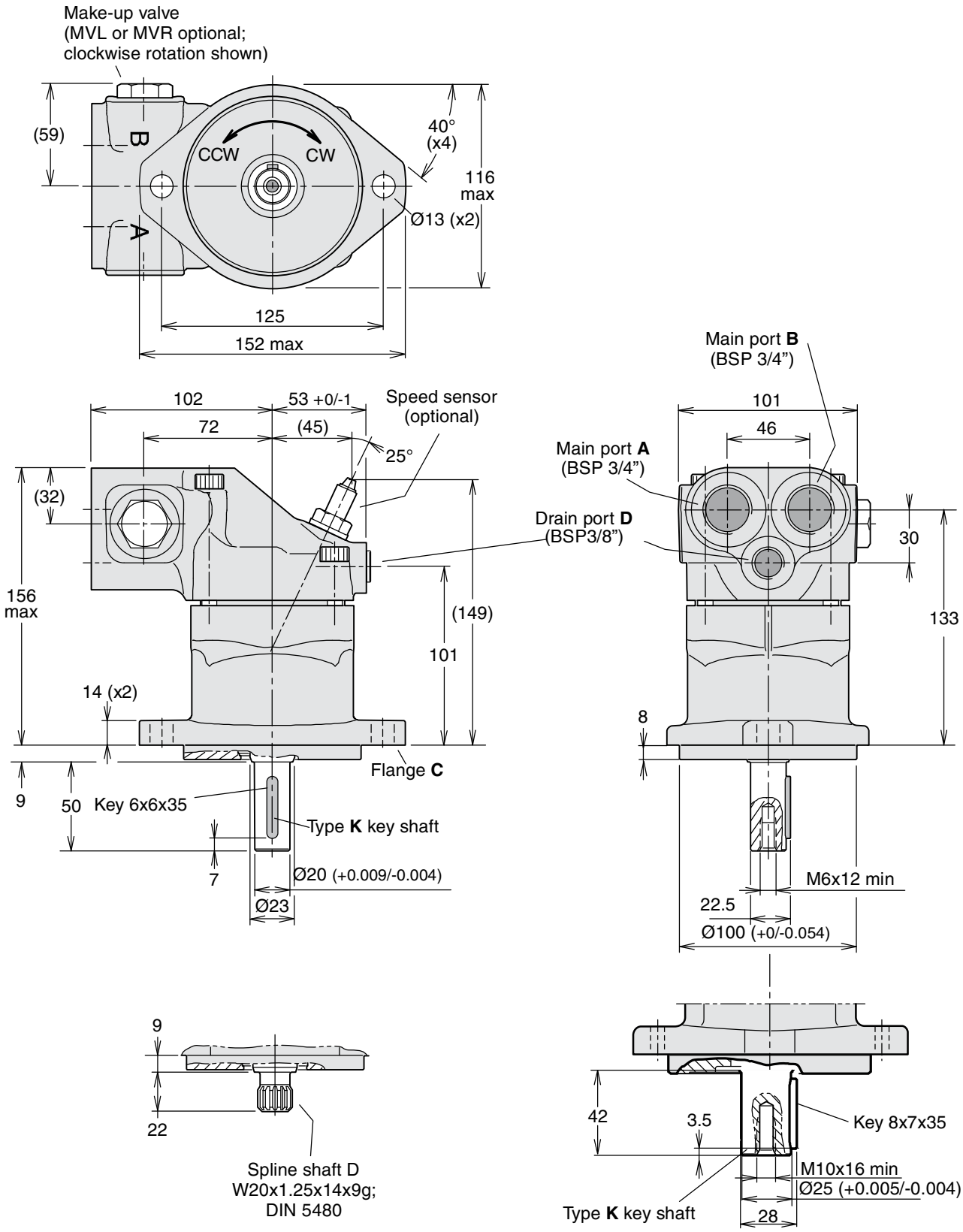

Parker Hannifin
Pump and Motor Division
Trollhättan, Sweden

F11-14
(CETOP versions)

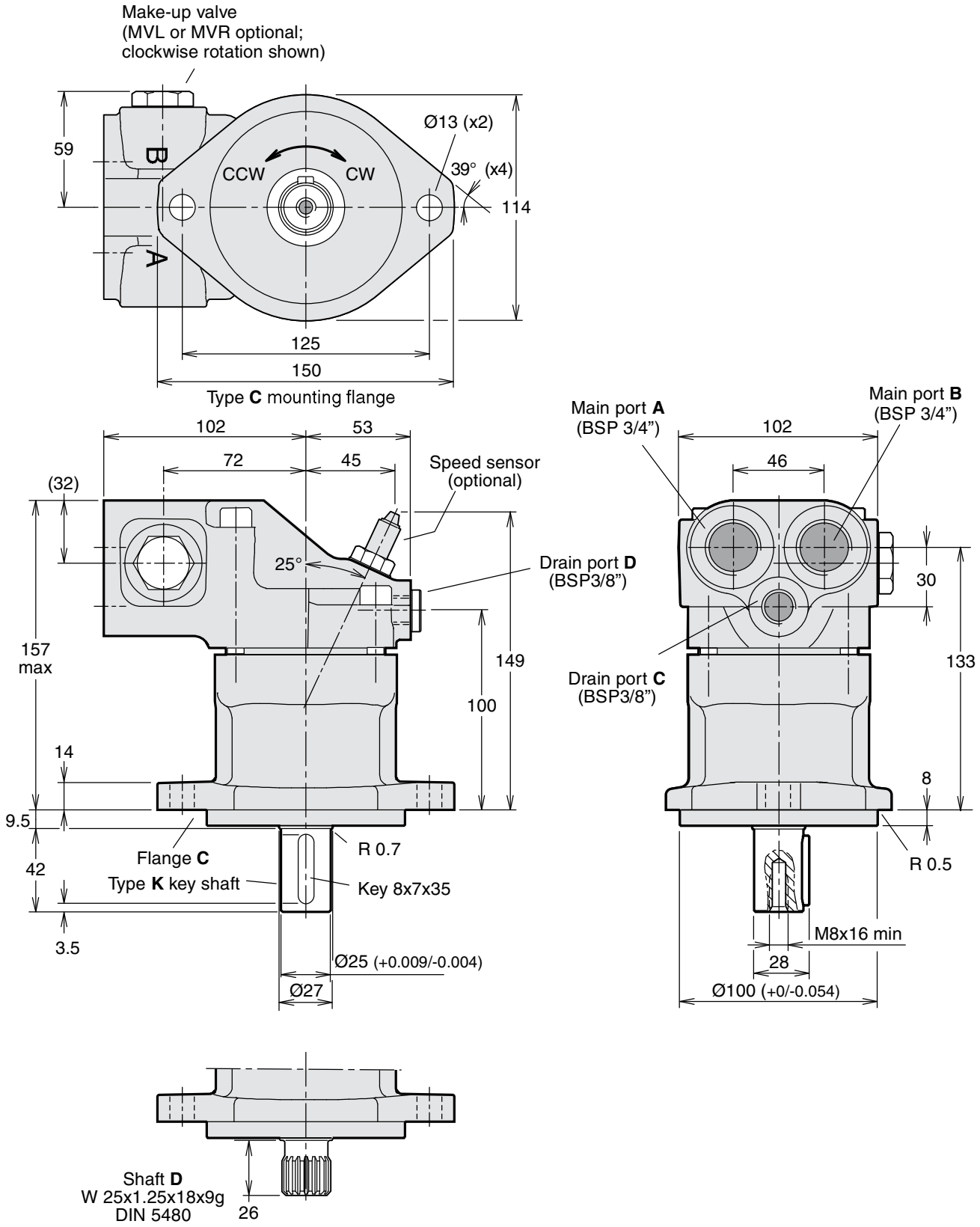

F11-19
(CETOP version)

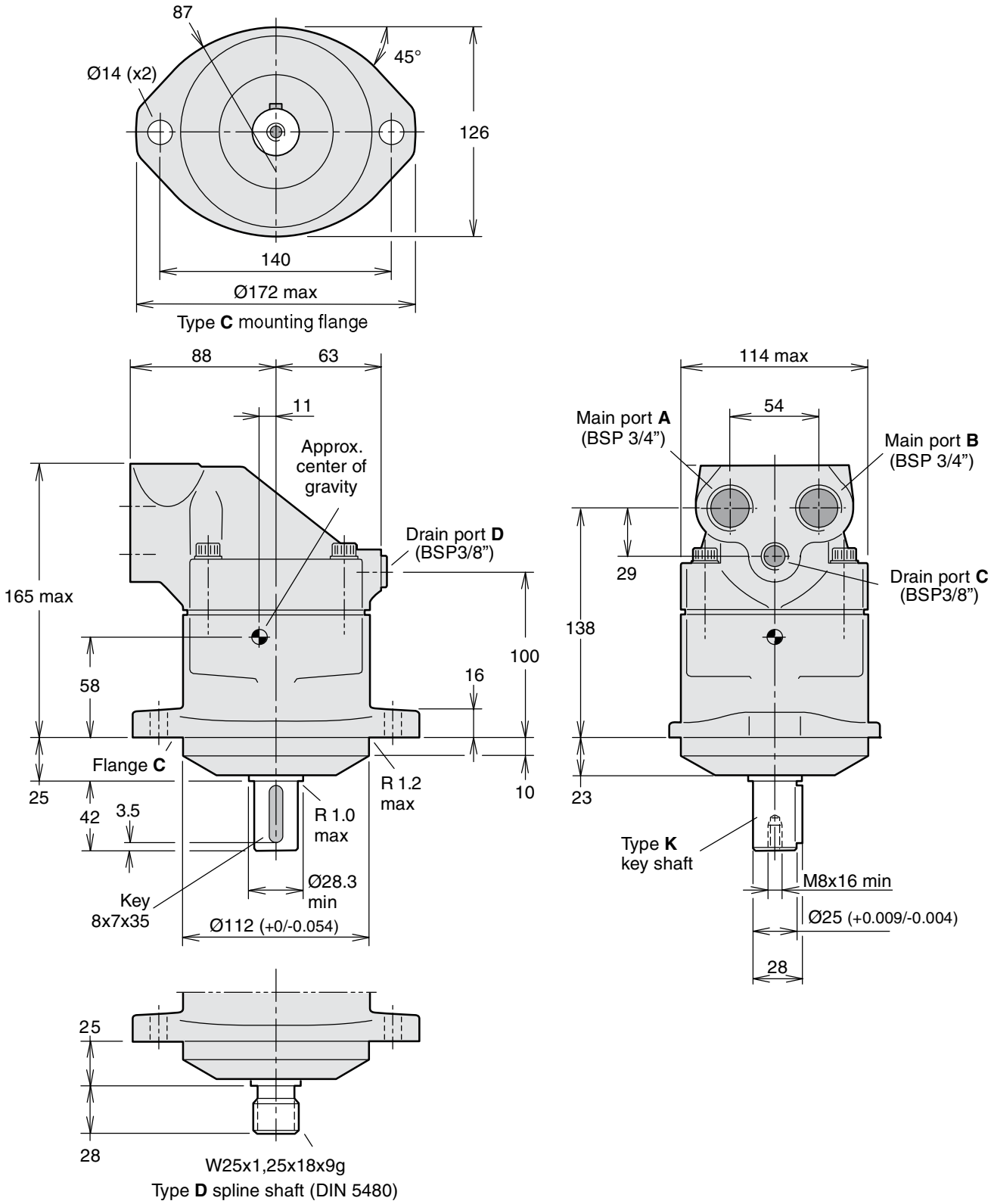

F11-10
(ISO versions)

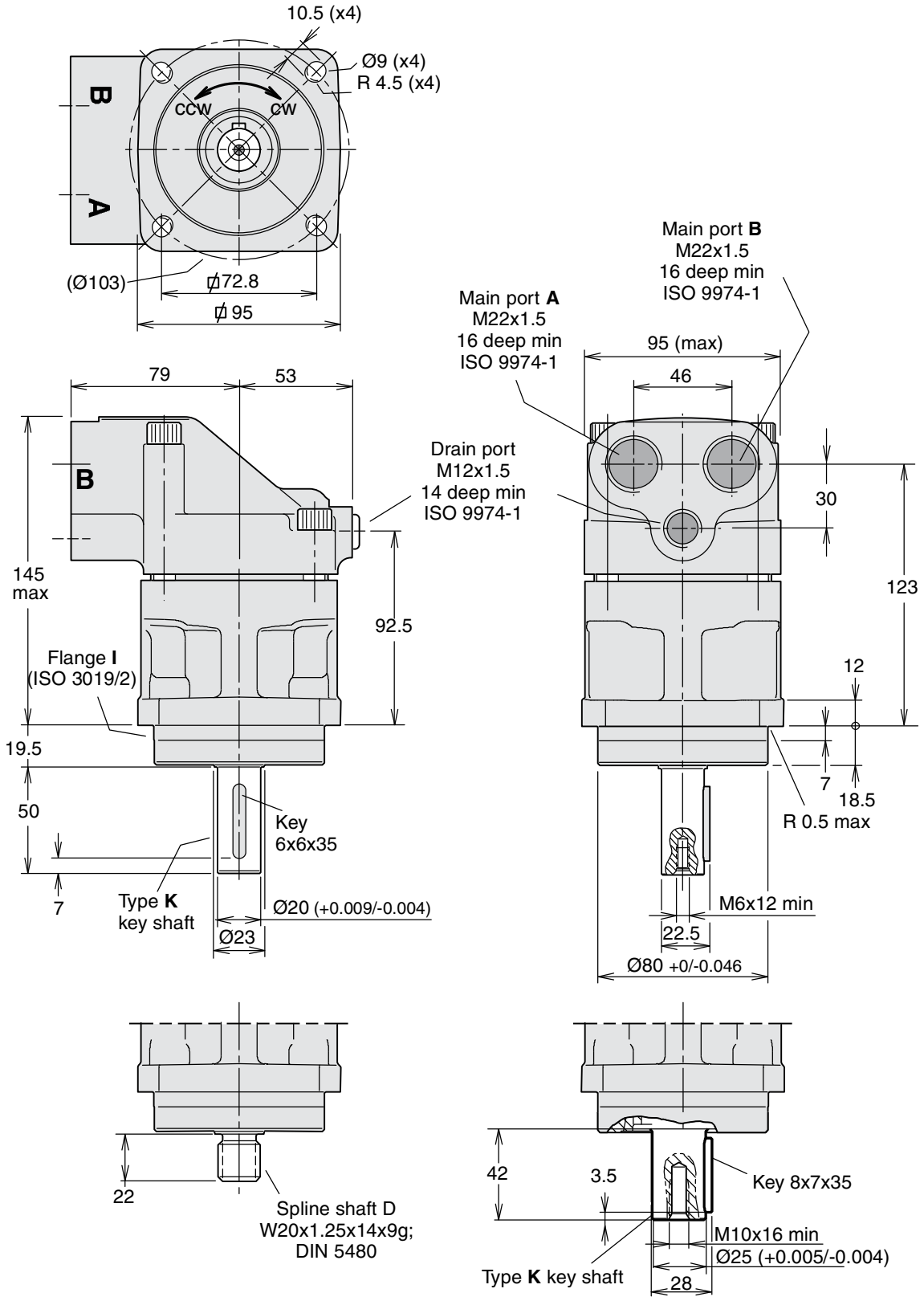

F11-12
(ISO versions)

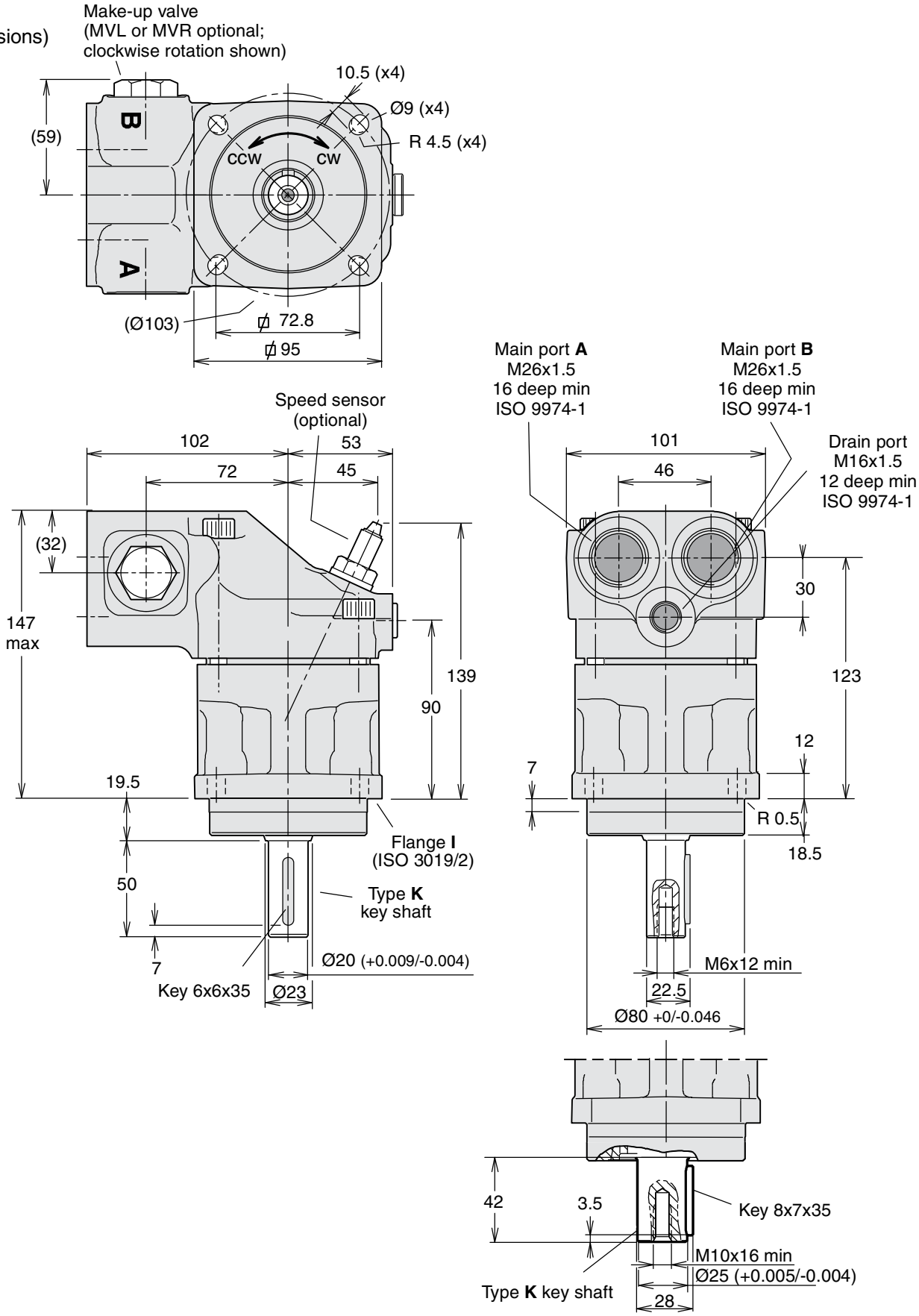

F11-14
(ISO versions)

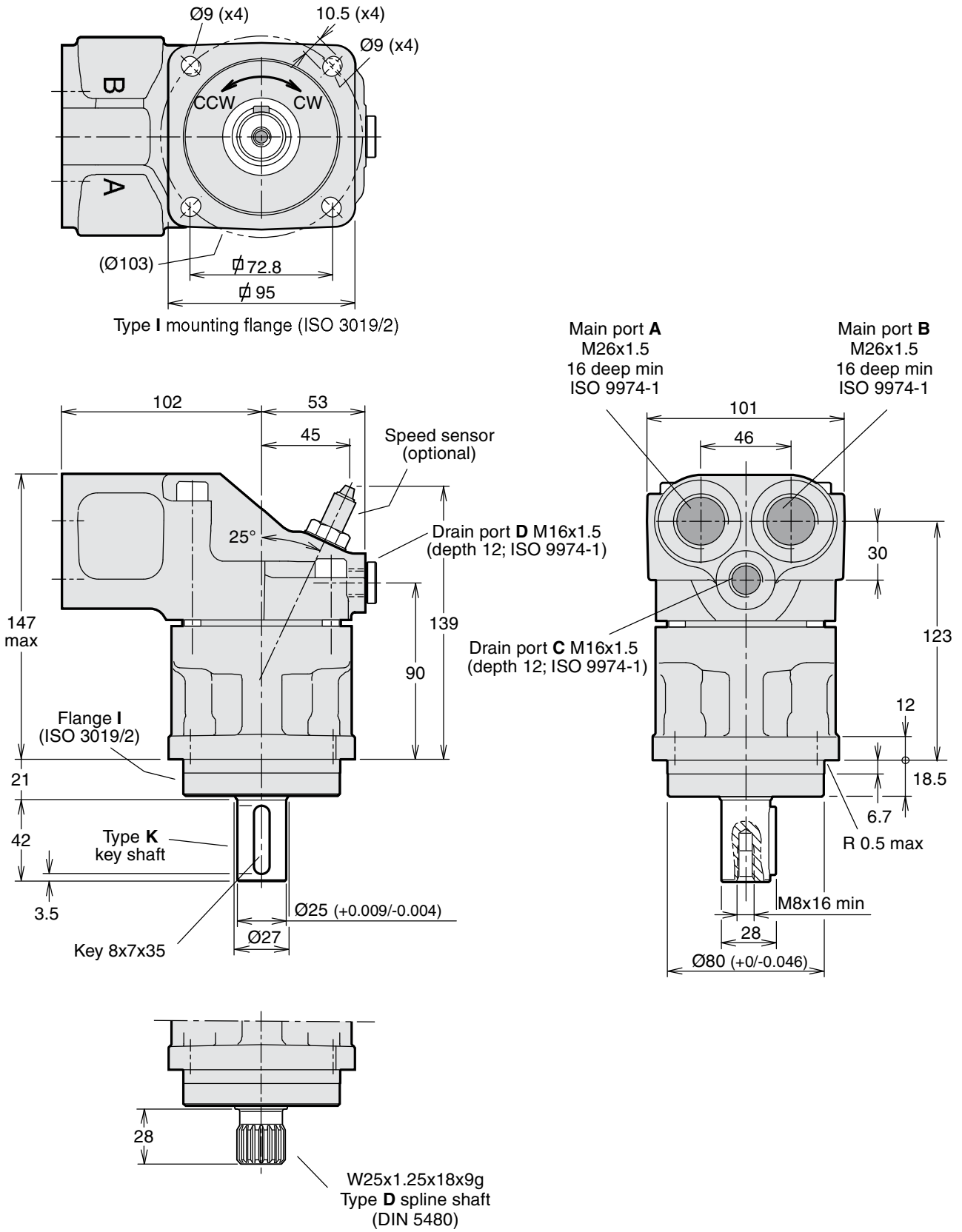

F11-10
(SAE versions)

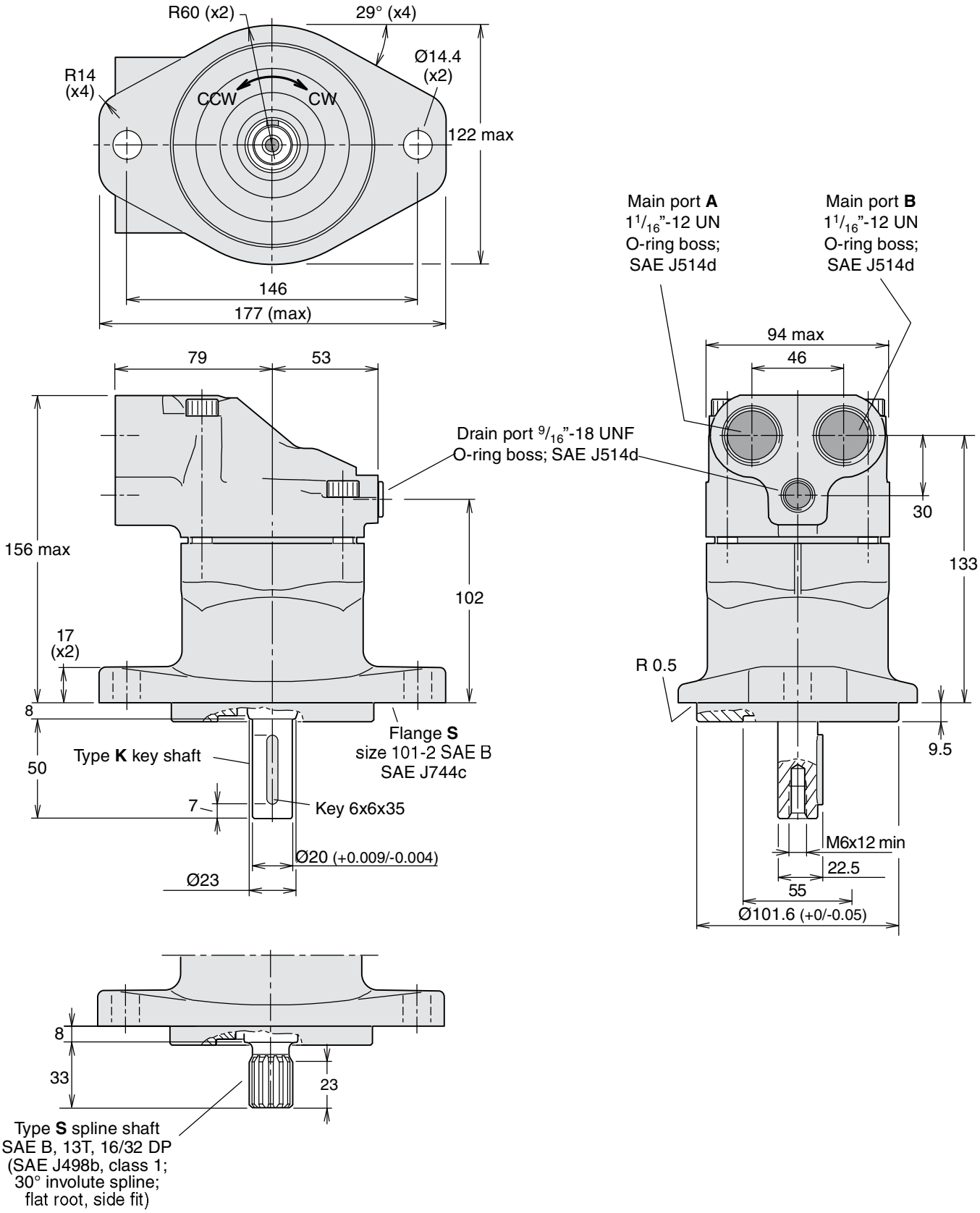

F11-12
(SAE versions)

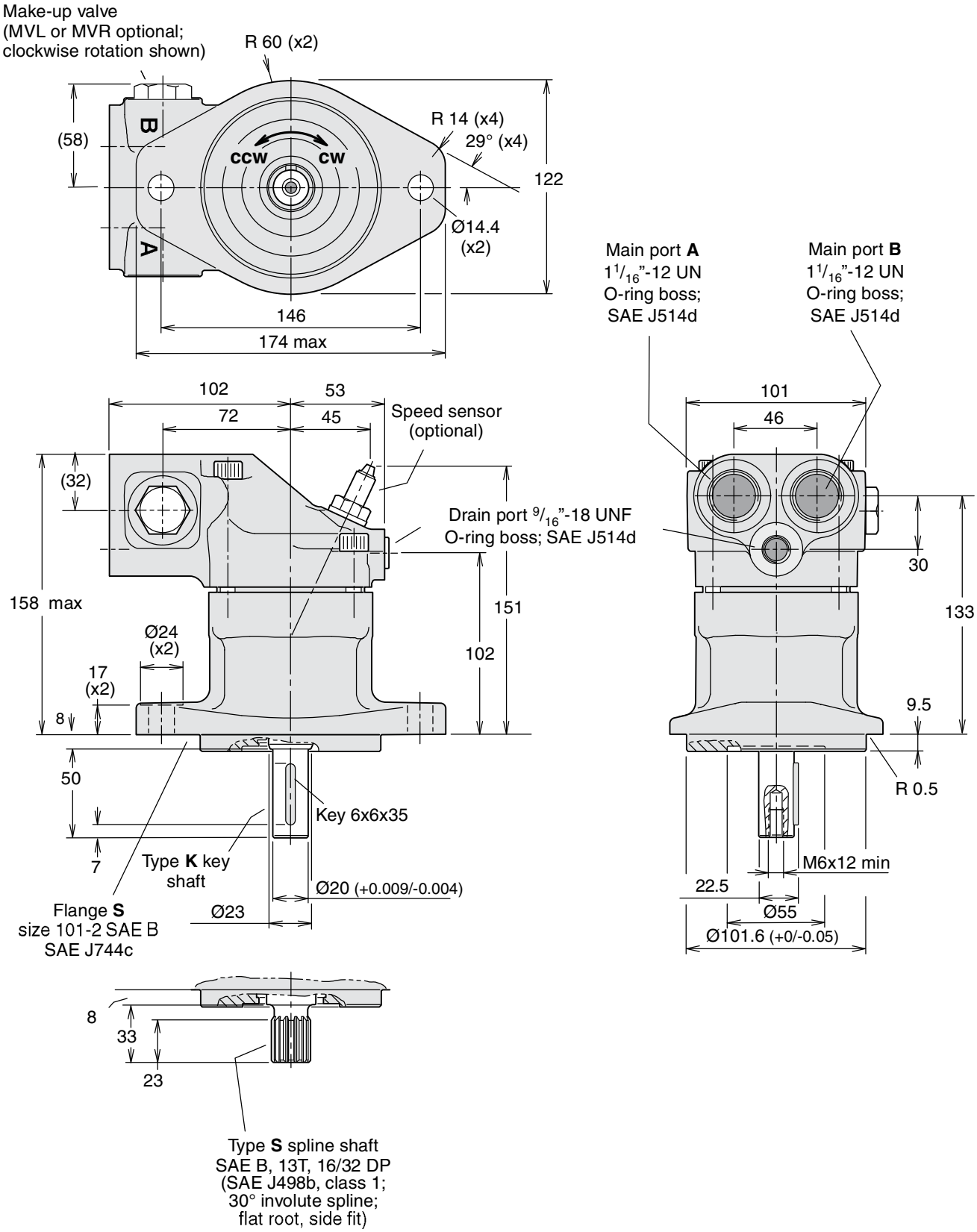

F11-14
(SAE versions)

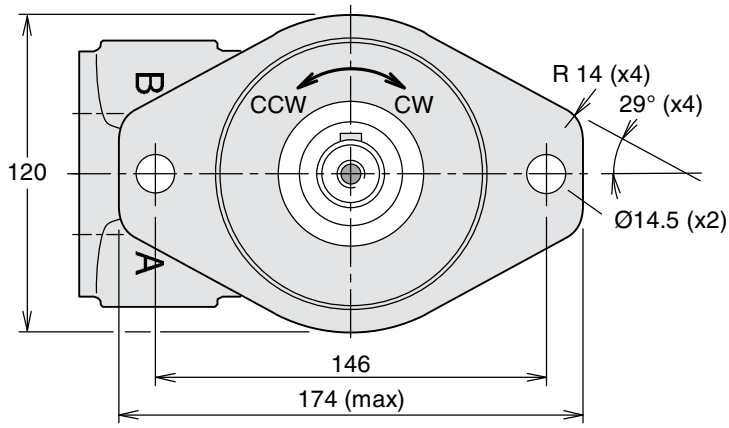

Type **S** mounting flange SAE 'B' (SAE J744c)

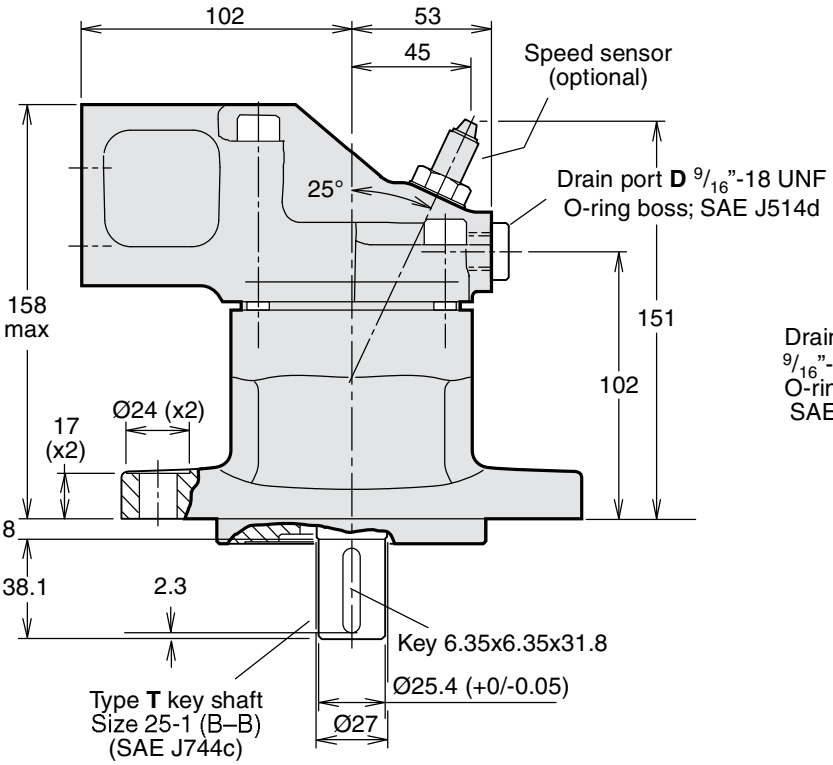

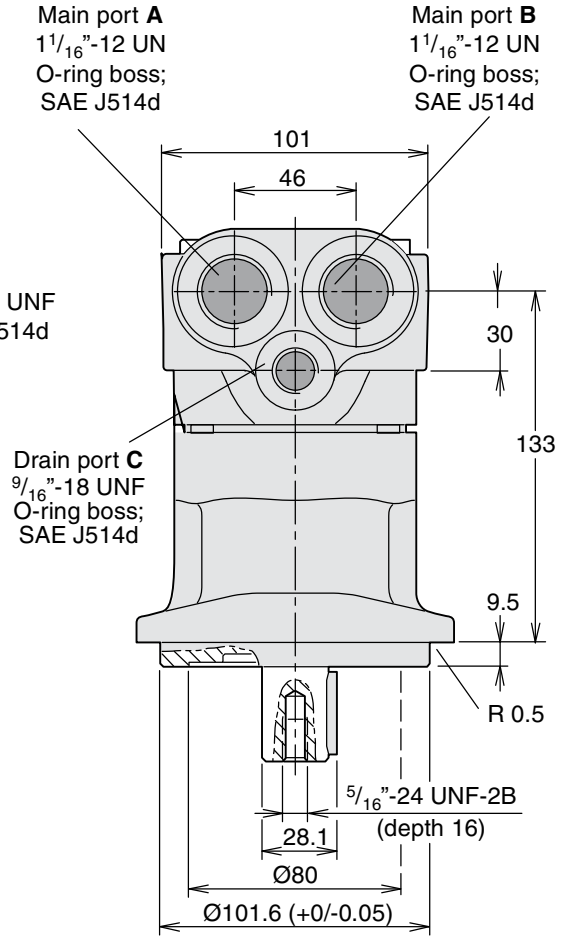

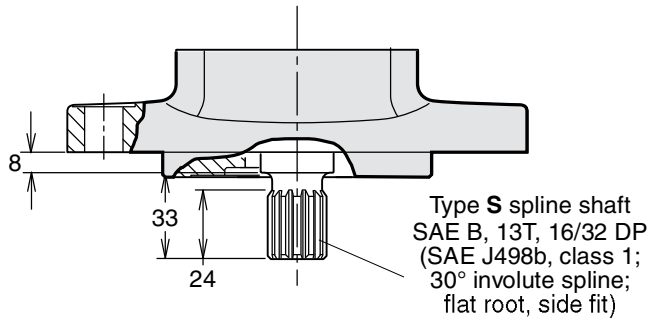

F11-19
(SAE version)

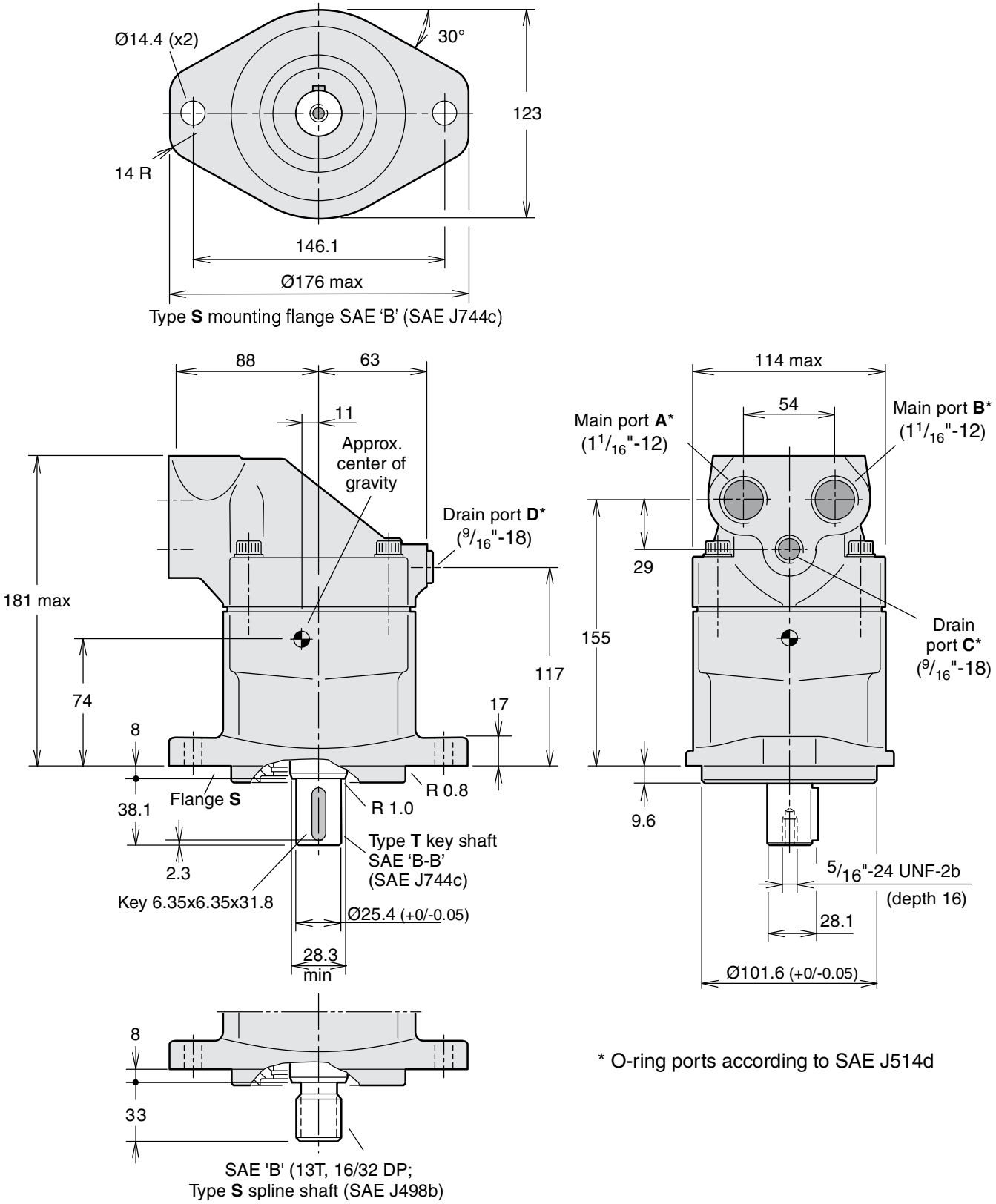

* O-ring ports according to SAE J514d

Parker Hannifin
Pump and Motor Division
Trollhättan, Sweden

Notes

Parker Hannifin
Pump and Motor Division
Trollhättan, Sweden

F12-30, -40, -60, -80, -90, -110 and -125
(ISO versions)

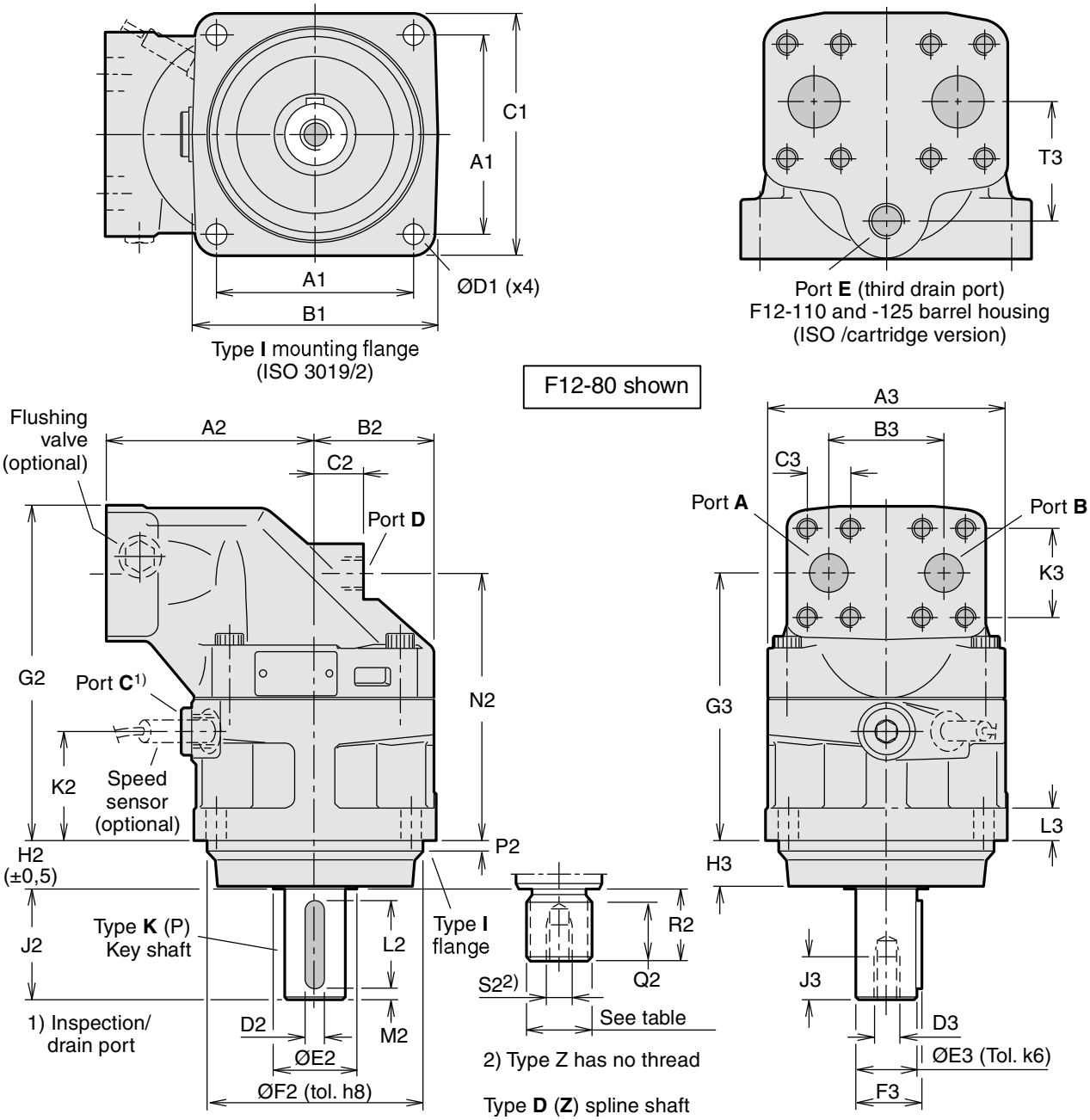

Dim.	F12-30	F12-40	F12-60	F12-80 F12-90	F12-110 F12-125
A1	88.4	113.2	113.2	127.2	141.4
B1	118	146	146	158	180
C1	118	142	144	155	180
D1	11	13.5	13.5	13.5	18
A2	100	110	125	135	145
B2	59	65	70	78	85
C2	25	26	22	32	38
D2	8	8	10	12	14
E2	33	42	42	52	58
F2	100	125	125	140	160
G2	172	173	190	216	231
H2	25.5	32.5	32.5	32.5	40.5
J2 1)	50	60	60	70	82
J2 2)	50	-	-	-	-
K2	55	52	54	70.5	66.5
L2	40	50	50	56	70
M2	5	5	5	7	6
N2	136.5	137	154	172.5	179
P2	8	8	8	8	8
Q2	28	28	33	36	41
R2 3)	35	35	40	45	50
R2 4)	43	35	35	41	-
S2 3)	M12 x24	M12 x24	M12 x28	M16 x36	M16 x36
S2 4)	-	M12 x24	-	M12 x28	-
A3	122	134	144	155	170
B3	66	66	66	75	83
C3	23.8	23.8	23.8	27.8	31.8
D3	M12	M12	M12	M16	M16
E3	30	30	35	40	45
F3	33	33	38	43	49
G3	136.5	137	154	172.5	179
H3	23.5	30.5	30.5	30.5	38.5
J3	24	24	28	36	36
K3	50.8	50.8	50.8	57.2	66.7
L3	18	20	20	20	22
T3	-	-	-	-	68

1) Key shaft type K
2) Key shaft type P
3) Spline shaft type D
4) Spline shaft type Z
5) Special number 264

Ports	F12-30	F12-40	F12-60	F12-80 F12-90	F12-110 F12-125
A, B size	3/4"	3/4"	3/4"	1"	1 1/4"
Screw thread 1)	M10 x20	M10 x20	M10 x20	M12 x20	M14 x26
C thread 2)	M22 x1.5	M22 x1.5	M22 x1.5	M22 x1.5	M22 x1.5
D thread 2)	M18 x1.5	M18 x1.5	M22 x1.5	M22 x1.5	M22 x1.5
E thread	-	-	-	-	M22 x1.5

A, B: ISO 6162

1) Metric thread x depth in mm
2) Metric thread x pitch in mm.

Spline shaft (DIN 5480)

	Type **D** (standard)	Type **Z** (optional)
F12-30	W30x2x14x9g	W25x1.25x18x9g
-40	W32x2x14x9g	W30x2x14x9g
-60	W35x2x16x9g	W32x2x14x9g
-80	W40x2x18x9g	W35x2x16x9g
-90	W40x2x18x9g	W35x2x16x9g
-110	W45x2x21x9g	W40x2x18x9g
-125	W45x2x21x9g	W40x2x18x9g

Key shaft

	Type **K** (std)	Type **P** (opt.)	Type **X** (opt.)
F12-30	Ø30	Ø25	-
-40	Ø30	-	Ø35 5)
-60	Ø35	-	-
-80	Ø40	-	-
-90	Ø40	-	-
-110	Ø45	-	-
-125	Ø45	-	-

= Max 350 bar operating pressure

F12-30, -40, -60, -80, -90, -110 and -125
(Cartridge versions)

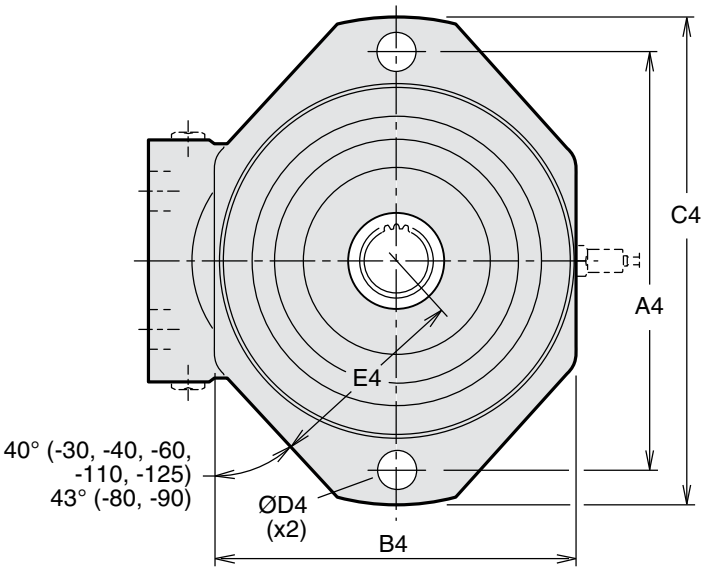

Type **C** mounting flange

F12-80 shown

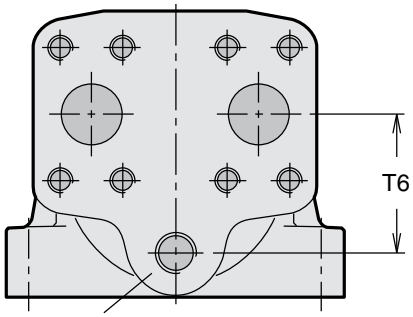

Port **E** (third drain port)
F12-110 and -125 barrel housing
(ISO /cartridge version)

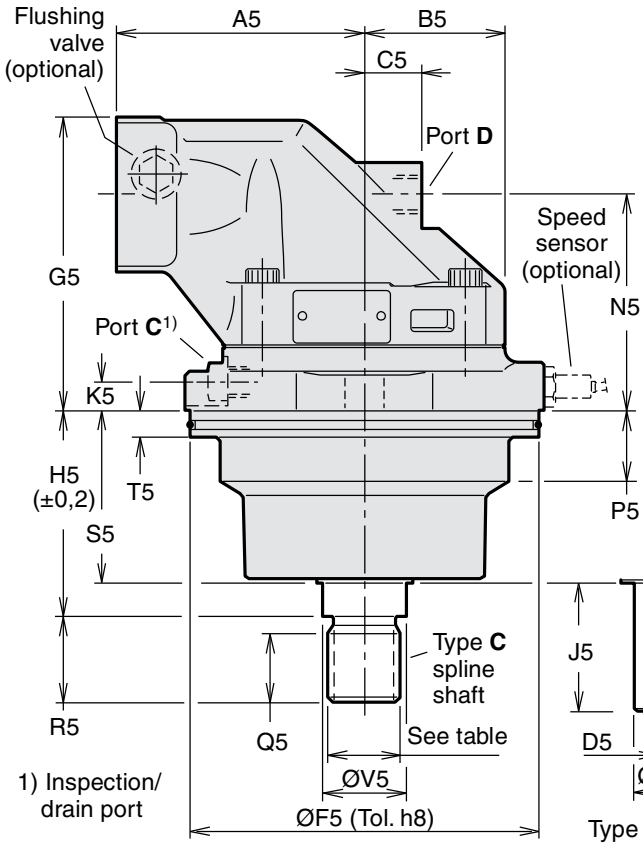

1) Inspection/ drain port

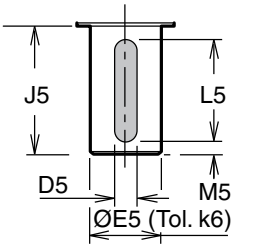

Type **K** (**X**) key shaft

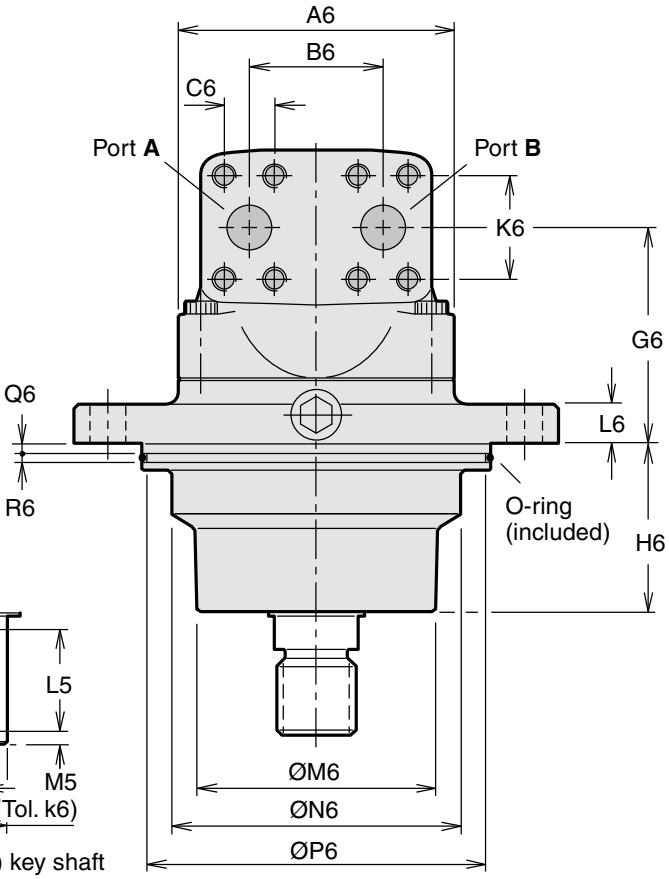

Dim.	F12-30	F12-40	F12-60	F12-80 F12-90	F12-110 F12-125
A4	160	200	200	224	250
B4	140	164	164	196	206
C4	188	235	235	260	286
D4	14	18	18	22	22
E4	77	95	95	110	116
A5	100	110	125	135	145
B5	59	65	70	77.5	85
C5	25	26	22	32	38
D5	8	8 1) 10 2)	10	12	14
E5	30	30 1) 35 2)	35	40	45
F5	135	160	160	190	200
G5	127	133	146	157	175
H5	89	92.3	92.3	110.5	122.8
J5	50	60	60	70	-
K5	14	16	15	15	15
L5	40	50	50	56	-
M5	5	5	5	7	-
N5	91	97	110	114	123
P5	22	30	31	40	40
Q5	28	28	28	37	37
R5	35	35	35	45	45
S5	70.5	72	76	91	95.7
T5	15	15	15	15	15
V5	32	35	35	45	45
A6	122	134	144	155	170
B6	66	66	66	75	83
C6	23.8	23.8	23.8	27.8	31.8
G6	91.5	97	110	114	123
H6	69.5	71	74	89.5	93.7
K6	50.8	50.8	50.8	57.2	66.7
L6	16	18	18	20	20
M6	92	115	115	130	140
N6	110	127	135	154	160
P6	128.2	153.2	153.2	183.2	193.2
Q6	5	5	5	5	5
R6	5	5	5	5	5
T6	-	-	-	-	68

1) Key shaft type **K**
2) Key shaft type **X** (opt.).
3) Special number 330
4) Special number 326
5) Special number 264

Ports	F12-30	F12-40	F12-60	F12-80 F12-90	F12-110 F12-125
A, B size	3/4"	3/4"	3/4"	1"	1 1/4"
Screw thread	M10 x20	M10 x20	M10 x20	M12 x22	M14 x26
C thread	M14 x1.5	M14 x1.5	M14 x1.5	M14 x1.5	M14 x1.5
D, E thread	M18 x1.5	M18 x1.5	M22 x1.5	M22 x1.5	M22 x1.5

A, B: ISO 6162

Spline shaft (DIN 5480)

	Type **C** (standard	Type **X** (optional))
F12-30	W30x2x14x9g	-
-40	W30x2x14x9g	-
-60	W30x2x14x9g	W35x2x16x9g 3)
-80	W40x2x18x9g	W35x2x16x9g 3)
-90	W40x2x18x9g	W35x2x16x9g 3)
-110	W40x2x18x9g	W45x2x21x9g 4)
-125	W40x2x18x9g	W45x2x21x9g 4)

Key shaft

	Type **K** (std)	Type **X** (opt.)
F12-30	Ø30	–
-40	–	Ø35 5)
-60	Ø35	–
-80	Ø40	–
-90	Ø40	–

O-ring dimensions

F12-30	127x4
-40	150x4
-60	150x4
-80	180x4
-90	180x4
-110	190x4
-125	190x4

F12-30, -40, -60, -80, -90, -110 and -125
(SAE versions with 4 bolt flange)

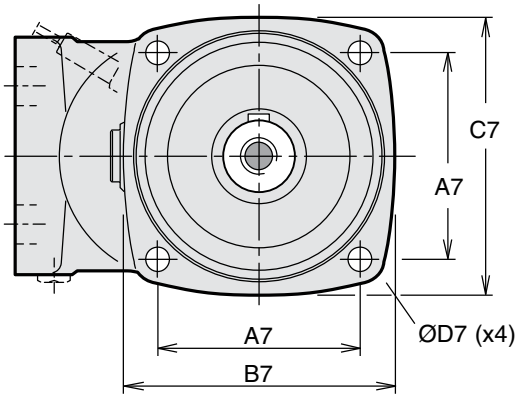

Type **S** (SAE 4 bolt) mounting flange

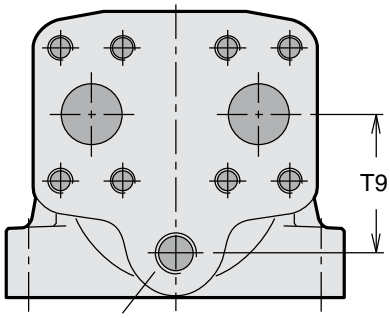

Port **E** (third drain port)
F12-110 and -125 barrel housing
(SAE version)

Shown: F12-80 with 4 bolt flange

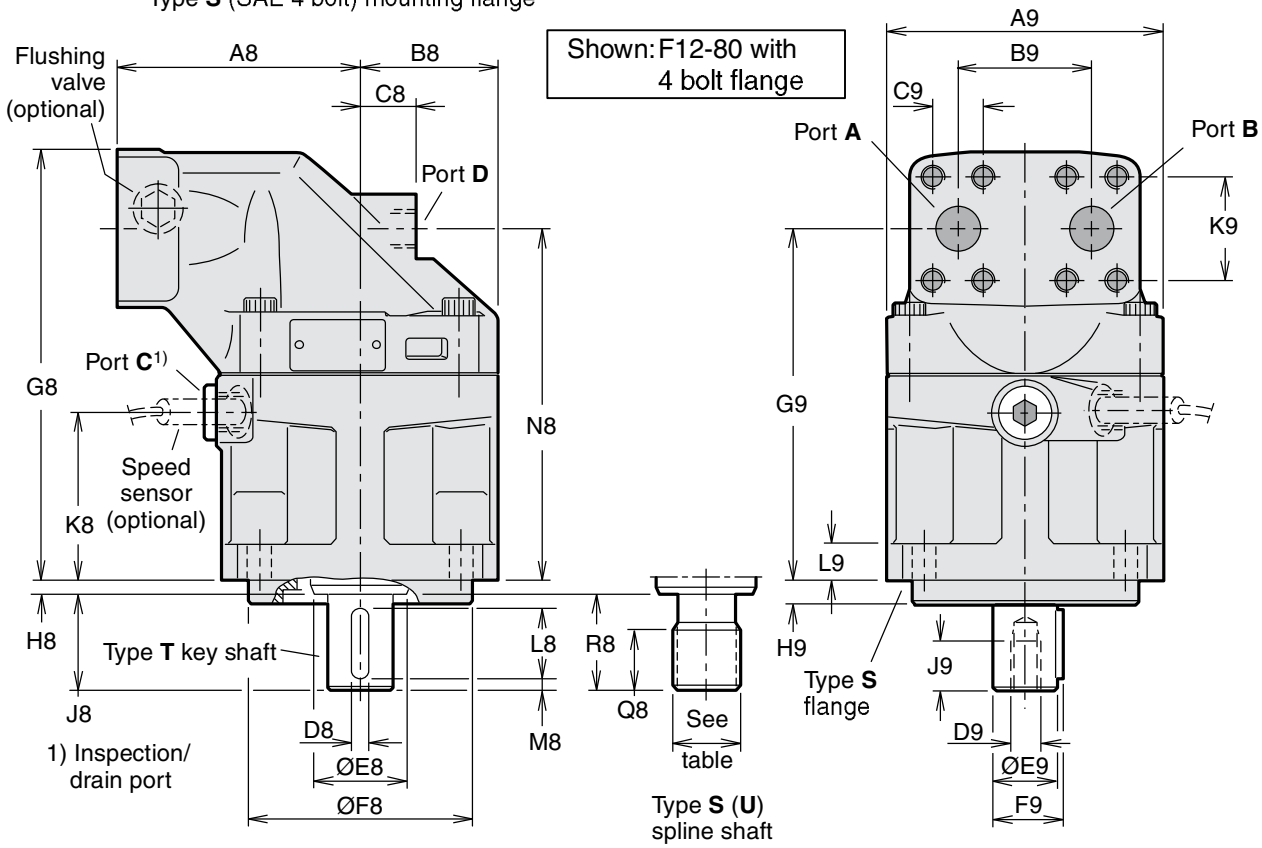

1) Inspection/ drain port

Dim.	F12-30	F12-40	F12-60	F12-80 F12-90	F12-110 F12-125
A7	89.8	114.5	114.5	114.5	161.6
B7	118	148	148	155	204
C7	118	144	144	155	200
D7	14	14	14	14	21
A8	100	110	125	135	145
B8	59	65	70	77.5	85
C8	25	26	22	32	38
D8	6.35	7.94	7.94	9.53	11.1
E8	33	42	42	52	57.5
F8	101.60/ 101.55	127.00/ 126.94	127.00/ 126.94	127.00/ 126.94	152.40/ 152.34
G8	189.5	197	214	240	264
H8	8	8	8	8	8
J8	38	48	48	54	67
K8	72	76	79	95	99
L8	31.8	38.1	38.1	44.5	54.1
M8	2.5	4	4	4	7.5
N8	153.5	161	178.3	197.1	212
Q8 1)	23	23	23	25	34
Q8 2)	-	-	-	23	-
R8 1)	33	48	48	54	66.7
R8 2)	-	-	-	48	-
A9	122	134	144	155	170
B9	66	66	66	75	83
C9	23.8	23.8	23.8	27.8	31.8
D9*	$^5/_{16}$"-24	$^3/_8$"-24	$^3/_8$"-24	$^1/_2$"-20	$^5/_8$"-18
E9	25.40/ 25.35	31.75/ 31.70	31.75/ 31.70	38.10/ 38.05	44.45/ 44.40
F9	28.2	35.3	35.3	42.3	49.4
G9	153.8	161	178.3	197.1	212
H9	9.7	12.7	12.7	12.7	12.7
J9	16	19	19	26	32
K9	50.8	50.8	50.8	57.2	66.7
L9	18	20	20	20	22
T9	-	-	-	-	68

* UNF-2B thread
1) Spline shaft type **S**
2) Spline shaft type **U**
3) Special number 254 or 255
4) Special number 255
5) Special number 254
6) Special number 328

Main ports A and B, type U (optional)

F12-80	1 $^5/_{16}$" - 12 UN
F12-90	1 $^5/_{16}$" - 12 UN
F12-110	1 $^5/_8$" - 12 UN
F12-125	1 $^5/_8$" - 12 UN

O-ring ports according to SAE J514d

Ports	F12-30	F12-40	F12-60	F12-80 F12-90	F12-110 F12-125
A, B size	$^3/_4$"	$^3/_4$"	$^3/_4$"	1"	1$^1/_4$"
Screw thread 3)	$^3/_8$"-16 x22	$^3/_8$"-16 x20	$^3/_8$"-16 x22	$^7/_{16}$"-14 x27	$^1/_2$"-13 x25
C thread	$^7/_8$"-14	$^7/_8$"-14	$^7/_8$"-14	$^7/_8$"-14	1$^1/_{16}$"-12
D thread	$^3/_4$"-16	$^3/_4$"-16	$^7/_8$"-14	$^7/_8$"-14	1$^1/_{16}$"-12
E thread	-	-	-	-	1$^1/_{16}$"-12

A, B: ISO 6162 C, D, E: O-ring boss (SAE J514)
3) UN thread x depth in mm.

Mounting flange (SAE J744)

	S (standard)	**X** (optional)
F12-30	SAE 'B', 4 bolt	-
-40	SAE 'C', "	-
-60	SAE 'C', "	-
-80	SAE 'C', "	SAE 'D', 4 bolt 3)
-90	SAE 'C', "	SAE 'D', 4 bolt 3)
-110	SAE 'D', "	-
-125	SAE 'D', "	-

Spline shaft (SAE J498b, class 1, flat root, side fit)

	S (standard)	**U** (opt.)	**X** (optional)
F12-30	SAE 'B' 13T, 16/32 DP	-	-
-40	SAE 'C' 14T, 12/24 DP	-	-
-60	SAE 'C' 14T, 12/24 DP	-	21T, 16/32DP 6)
-80	SAE 'C-C' 17T, 12/24 DP	SAE 'C' 14T,12/24DP	SAE 'D' 13T, 8/16 DP 4)
-90	SAE 'C-C' 17T, 12/24 DP	SAE 'C' 14T,12/24DP	SAE 'D' 13T, 8/16 DP 4)
-110	SAE 'D' 13T, 8/16 DP	-	-
-125	SAE 'D' 13T, 8/16 DP	-	-

= Max 350 bar operating pressure.

Key shaft (SAE J744)

	T (standard)	**X** (optional)
F12-30	SAE 'B-B' (Ø25.4 mm/1")	-
-40	SAE 'C' (Ø31.75 mm/1$^1/_4$")	-
-60	SAE 'C' (Ø31.75 mm/1$^1/_4$")	-
-80	SAE 'C-C' (Ø38.1 mm/1$^1/_2$")	SAE 'D' (Ø44.45 mm/1$^3/_4$") 5)
-90	SAE 'C-C' (Ø38.1 mm/1$^1/_2$")	SAE 'D' (Ø44.45 mm/1$^3/_4$") 5)
-110	SAE 'D' (Ø44.45 mm/1$^3/_4$")	-
-125	SAE 'D' (Ø44.45 mm/1$^3/_4$")	-

Parker Hannifin
Pump and Motor Division
Trollhättan, Sweden

F12-30, -40, and -60
(SAE versions with 2 bolt flange)

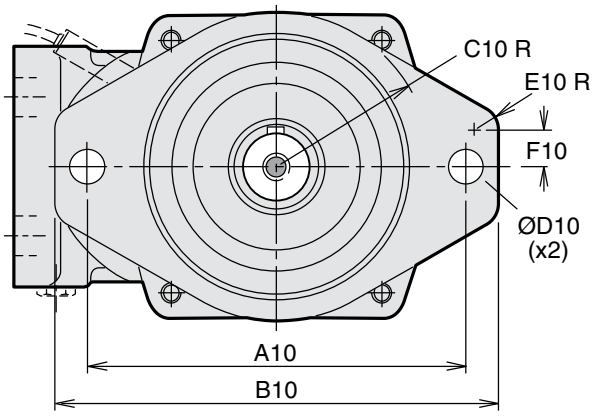

Type **T** (SAE 2 bolt) mounting flange

Shown: F12-60 with 2 bolt flange

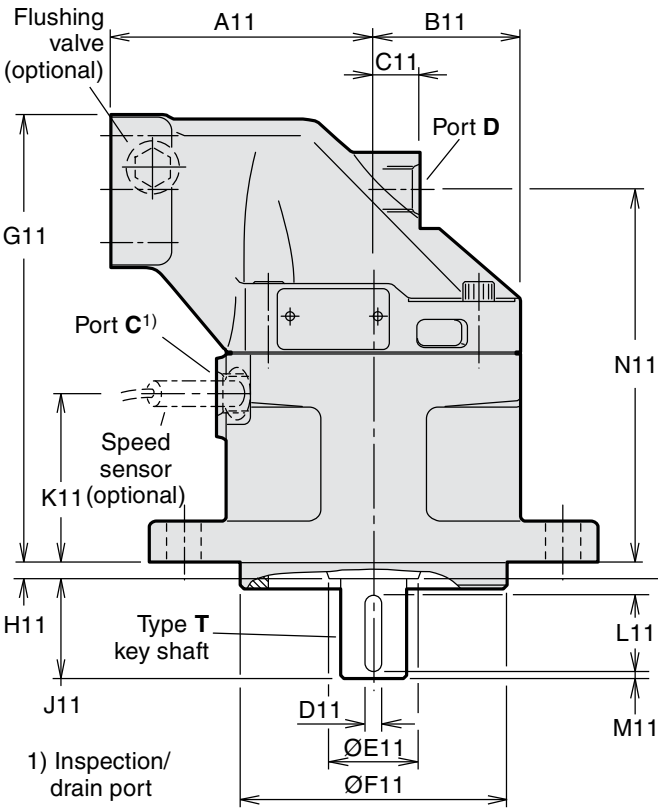

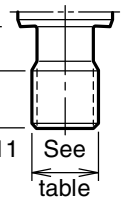

Type **S** spline shaft

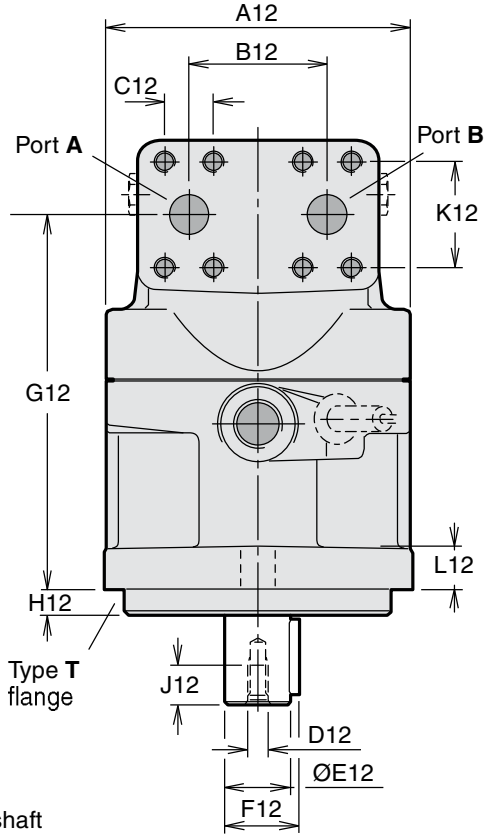

Dim.	F12-30	F12-40	F12-60
A10	146	181	181
B10	176	215	215
C10	63	74	74
D10	14.4	17.5	17.5
E10	10	16	16
F10	10	15.5	15.5
A11	100	110	125
B11	59	65	70
C11	25	26	22
D11	6.35	7.94	7.94
E11	33	42	42
F11	101.60/ 101.55	127.00/ 126.95	127.00/ 126.95
G11	189.5	197	214
H11	8	8	8
J11	38	48	48
K11	71	77	81.5
L11	31.8	38.1	38.1
M11	2.5	4	4
N11	154	161	178.5
Q11	26	27	27
R11	33	48	48
A12	122	134	144
B12	66	66	66
C12	23.8	23.8	23.8
D12[1)]	$^5/_{16}$"-24	$^3/_8$"-24	$^3/_8$"-24
E12	25.40/ 25.35	31.75/ 31.70	31.75/ 31.70
F12	28.2	35.2	35.2
G12	154	161	178.5
H12	9.7	12.7	12.7
J12	16	19	19
K12	50.8	50.8	50.8
L12	18	20	20

1) UNF-2B thread

Ports	F12-30	F12-40	F12-60
A, B size	19 ($^3/_4$")	19 ($^3/_4$")	19 ($^3/_4$")
Screw thread[2)]	$^3/_8$"-16 x22	$^3/_8$"-16 x20	$^3/_8$"-16 x22
C thread	$^3/_4$"-16	$^3/_4$"-16	$^7/_8$"-14
D thread	$^3/_4$"-16	$^3/_4$"-16	$^7/_8$"-14

A, B (main ports): SAE J518c (6000 psi)
C, D (drain ports): O-ring boss (SAE J514)
2) UN thread

Main ports A and B, type U (optional)

F12-30	1 $^1/_{16}$" - 12 UN
-40	1 $^5/_{16}$" - 12 UN
-60	1 $^5/_{16}$" - 12 UN

O-ring ports according to SAE J514d

= Max 350 bar operating pressure.

Mounting flange T (SAE J744)

F12-30	SAE 'B', 2 bolt
-40	SAE 'C', 2 bolt
-60	SAE 'C', 2 bolt

Spline shaft S (SAE J498b, class 1, flat root, side fit)

F12-30	SAE 'B' 13 T; 16/32 DP
-40	SAE 'C' 14 T; 12/24 DP
-60	SAE 'C' 14 T; 12/24 DP

Key shaft T (SAE J744)

F12-30	SAE 'B-B' Ø25.4 mm/1"
-40	SAE 'C' Ø31.75 mm/1$^1/_4$"
-60	SAE 'C' Ø31.75 mm/1$^1/_4$"

F12-150
(CETOP version)

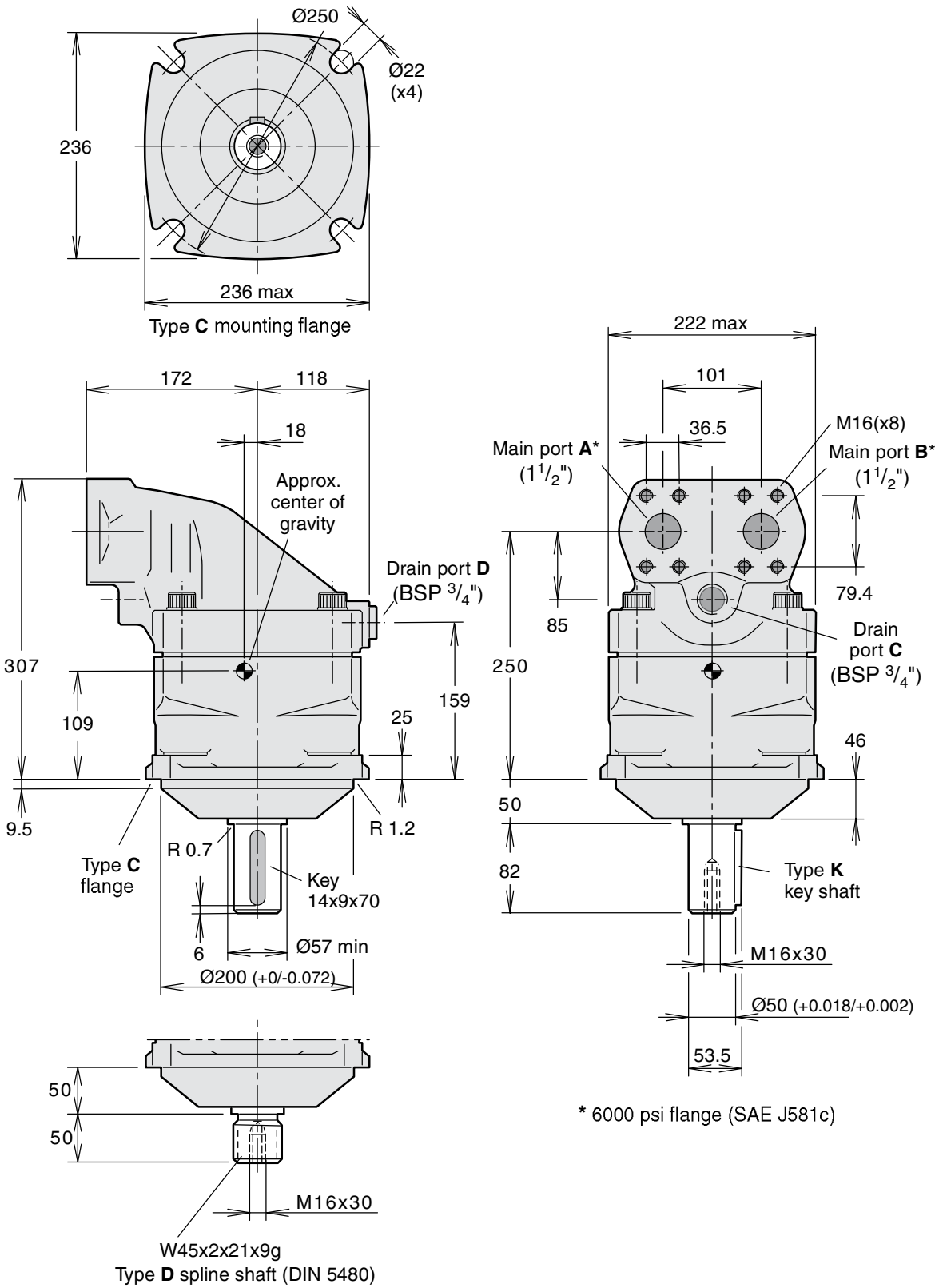

* 6000 psi flange (SAE J581c)

Parker Hannifin
Pump and Motor Division
Trollhättan, Sweden

F12-150
(SAE version)

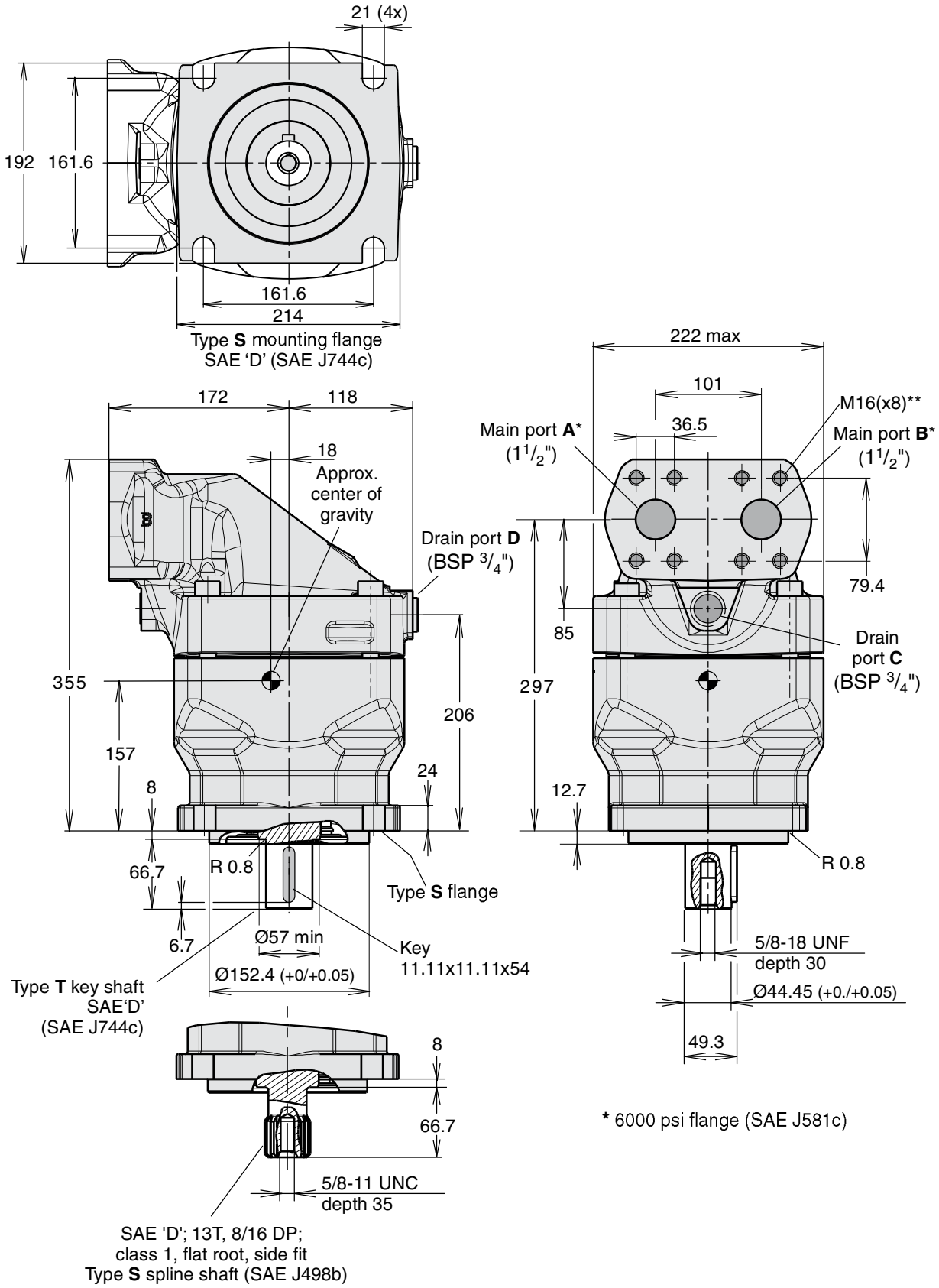

***** 6000 psi flange (SAE J581c)

F12-250
(SAE version)

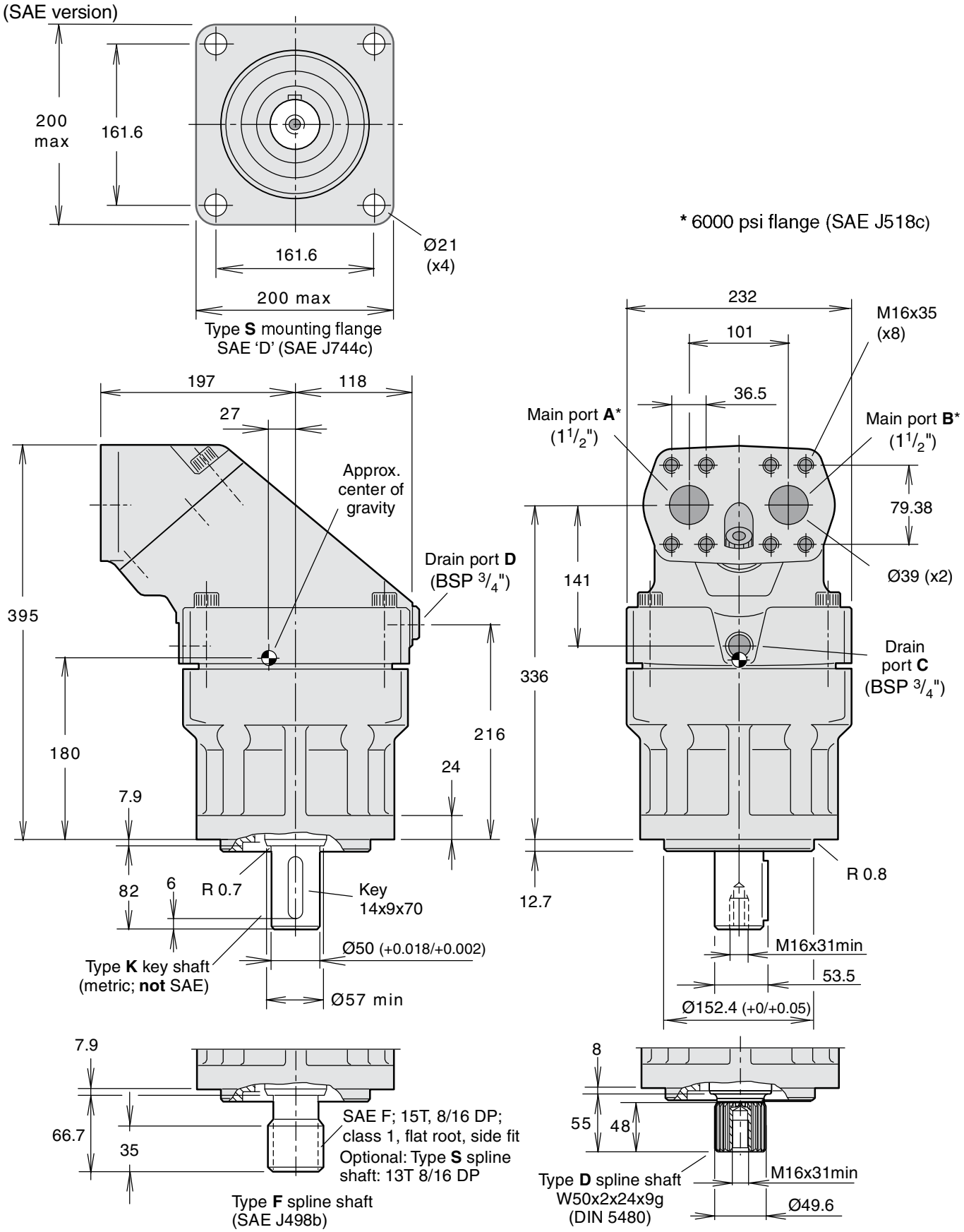

Parker Hannifin
Pump and Motor Division
Trollhättan, Sweden

F11 in saw motor applications

Series F11 motors have proven suitable for demanding applications such as chain saws. Primarily due to the 40° bent-axis design, spherical pistons (with laminated piston rings) and gear synchronization, very high speeds are permissible. Not even low temperatures at start-up affect reliability.

To further enhance the saw function and, at the same time, reduce weight, cost and installation dimensions, a specific saw motor has been developed (frame sizes -10, -14 and -19; refer to the illustration to the right) which is specifically dedicated to bar saws. The motor allows the saw bar bearings to be mounted directly on the motor housing, and the sprocket installs on the motor shaft without additional bearings.

For more detailed information (available versions, ordering codes, installation dimensions, etc.), refer to 'F11 Saw Motors' (catalogue HY30-8245).

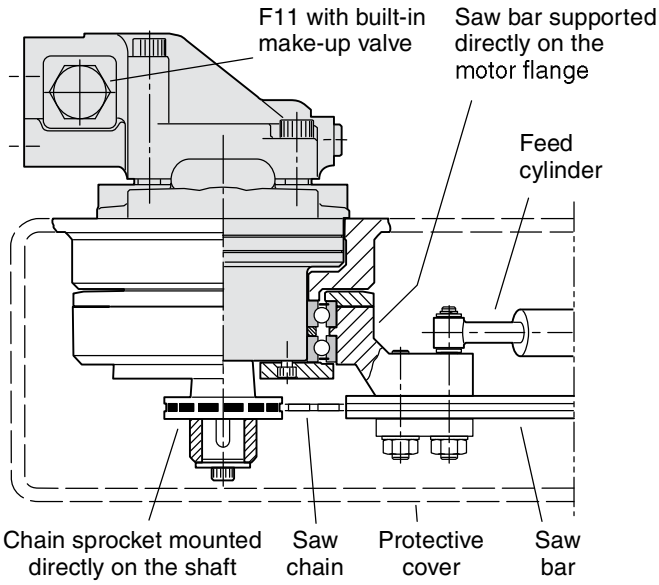

Chain saw installation (example; F11-10 shown)

Series F11iP

The saw motor unit has integrated functions for start/stop and speed control, which means long motor life.

The saw motor also controls the saw bar feed function, which provides optimal chain speed and saw performance during the entire cutting process.

To further enhance the saw function and, at the same time, reduce weight, cost and installation dimensions, Parker Hannifin has thus developed a motor unit which is specifically dedicated to chain saws.

Benefits

- Simple installation means lower cost
- Low overall weight
- Compact installation
- Reduced motor shaft loading
- Improved performance
- Controlled cutting process.

Saw motor requirements and recommendations

In order to obtain the most satisfactory function of the saw motor, the hydraulic system of the machine must be able to maintain a system pressure through the whole cut of at least 220 bar at the motor; higher pressure levels (up to max allowed for the motor) will, of course, increase the performance even further.

Through the whole cut the corresponding flow into the unit should, at least, be:

- 180 l/min @ 8 500 rpm and 14-tooth chain sprocket
- 195 l/min @ 9 200 rpm and 13-tooth chain sprocket
- 210 l/min @ 9 900 rpm and 12-tooth chain sprocket.

As a consequence, the pump must be able to deliver at least a 5% higher flow than what is shown above to properly secure the saw function.

In order to utilize the full potential of the saw motor, it is most important to minimize pressure losses in the hydraulic system as much as possible. Avoid using so called 'banjo' couplings and make sure there are no sharp bends in the utilized hydraulic hoses, couplings and hydraulic piping.

The saw motor unit has a motor flushing function which is integrated with the sword feed function. By connecting the drain port "D" directly to tank, additional flushing will usually not be required.

As the saw bar feed function is of a re-generative type (refer to the saw function on page 42) a 40/30 or 40/25 mm feed cylinder is recommended; this will ensure the best cutting performance of the saw.

If another cylinder configuration is being considered, please contact Parker Hannifin.

The electric signal to the 'start/stop' solenoid which starts the cutting cycle must be of the 'no ramp' type, so that the saw motor can start immediately without delay; otherwise, there may be a risk of motor breakdown.

NOTE: The chain saw function is covered on page 42

For more detailed information (available versions, ordering codes, installation dimensions, etc.), refer to 'F11 Saw Motors' (catalogue HY30-8251).

Chain saw function

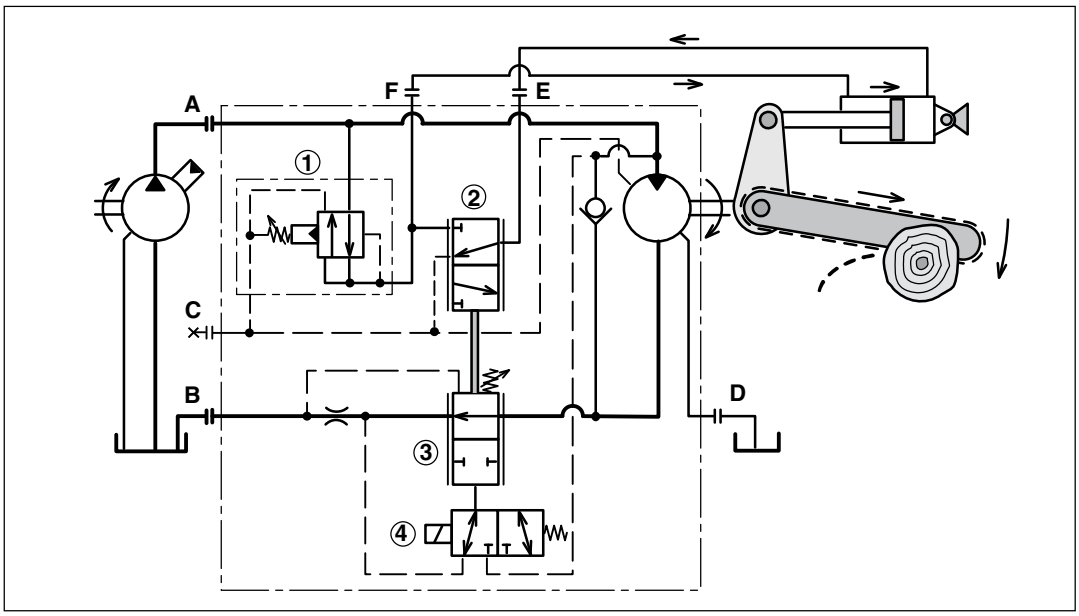

Chain saw function - cutting mode.

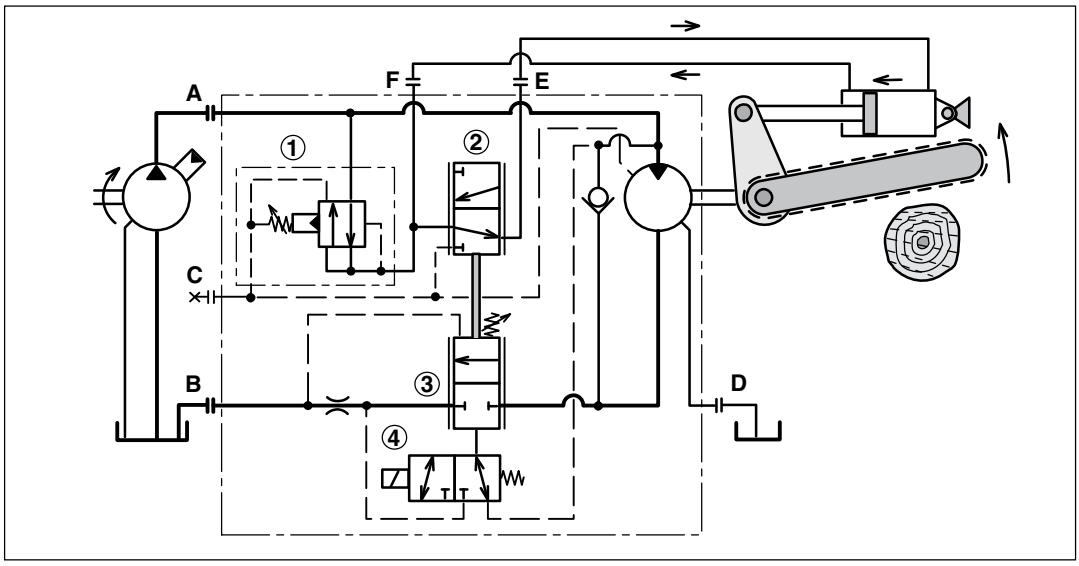

Chain saw function - return mode.

Cutting mode (refer to the top schematic)
The machine operator activates the start/stop function '4' which starts the saw motor. When the motor reaches operating speed, the cylinder piston side (port 'E') is drained and the cutting bar starts to move 'down'.

The drain flow (through port 'E' and valve '2'), provides cooling to the motor case.

Return mode (refer to the bottom schematic)
When the tree or log has been cut through, the operator de-activates the start/stop solenoid valve '4'. Valve spools '2' and '3' move to the 'up' position and the motor stops turning.

At the same time both sides of the cylinder are pressurized and the cutting bar moves 'up' to the start position (because of the re-generative cylinder/valve hook-up).

NOTE:
- The pressure compensated pump is operating during the entire cutting cycle.
- The pressure reducing valve, '1', reduces the pressure to the saw bar cylinder.
- The connected spool valve functions, '2' and '3', control the speed of the motor as well as the saw bar speed.

F11 and F12 fan motors

Frame sizes -10, -12, -14, -19 (F11) and -30 (F12) are also available as 'fan motors' with a built-in check valve (refer to the schematic below)

Just like the saw motor, the fan motor can be operated at very high speeds without reliability problems.

The fan is usually installed directly on the motor shaft without additional bearing support.

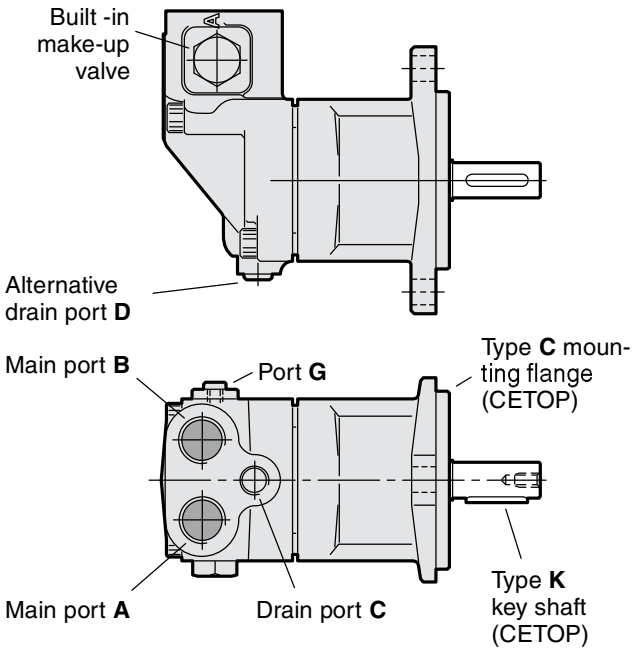

Fan motor (F11-10 left hand rotated shown).

Fan motor circuit

Because of the built-in check valve, either left hand (L) or right hand (R) rotation must be specified when ordering the motor.

When the pump flow to the motor is shut off and the motor is operating at very high speeds, it is important that sufficient return port back pressure is available (port B in the schematic to the right).

The check valve will then open and direct flow to the motor inlet port. If the inlet pressure is insufficient, motor cavitation will be experienced.

In an open circuit, back pressure can be created by a counter pressure valve installed in the return line; preferably, it should be pilot operated to minimize power losses. A back pressure of about 10 bar is sufficient in most applications.

For more drawings illustrating motors with make-up valve, see page 19, 20, 23 and 26

Example of ordering code

F11-012-HB-IV-K-000-MVL-0

MVL = Make-up valve, counter clockwise rotation

MVR = Make-up valve, clockwise rotation

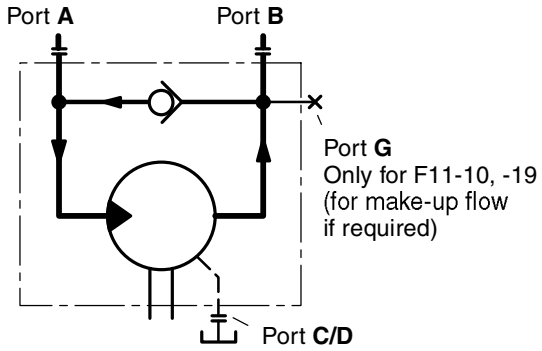

Fan motor schematic (left hand rotation shown).

Integrated flushing valve (F12-30, -40, -60, -80, -90)

General information

The integrated flushing valve supplies the motor with a cooling flow through the case which may be required when operating at high speeds and power levels.

In a closed loop hydrostatic transmission the flushing valve provides that cool fluid from the charge circuit is constantly added to the main circuit.

The flushing valve consists of a 'three-position', three-way spool valve which connects the low pressure side of the main hydraulic circuit with the motor case. The valve opens at a pressure differential between port A and port B of about 14 bar.

In order to limit the flow, a nozzle with a suitable orifice is available from Parker Hannifin; refer to the table below right. The diagram to the right shows flow versus differential pressure at selected orifice sizes.

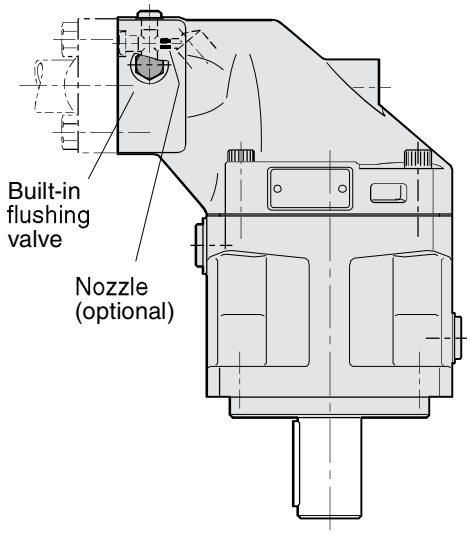

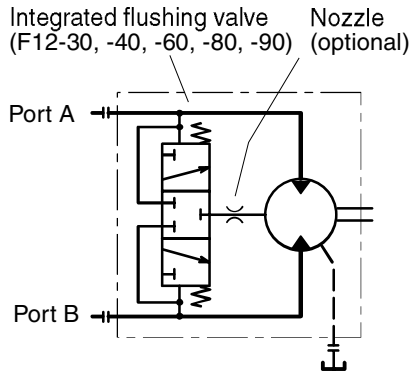

Hydraulic schematic.

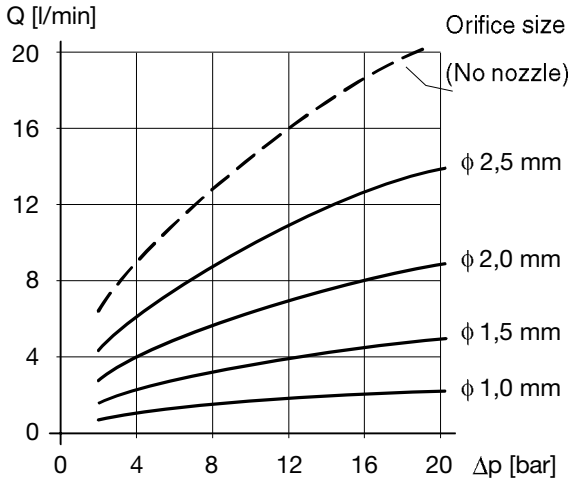

Flow versus pressure differential (port A or B to tank).

Ordering code

F12 – 080 – MF – IV – K – 000 – L01 – 0

Standard F12 ordering code
(for F12-30, -40, -60, -80, -90)

Code	Nozzle designation
L	(refer to the table)

NOTE: FV13 flushing valve block for F12-110 shown on next page.

Restrictor nozzles

The following table shows currently available nozzles and the corresponding F12 ordering code designation (F12-30/-40/-60: M5x0.8 thread; F12-80, -90: M10x1.0).

Designation	Orifice size [mm]	Part no. for F12-30/-40/-60	Part no. for F12-80/-90
L01 (std.)	1.3	370 4595	379 4413
L02	0.8	370 4590	379 3326
L06	1.7	370 5821	379 4417
L07	2.0	370 5824	379 4420
L10	2.5	3783025	378 3029

NOTE: L00 - no nozzel.

General information (for F12-110, -125)

The FV13 for the F12-110 / -125 motor has the same function as the integrated flushing valve for the other F12 frame sizes. The valve block mounts between the motor port flange and the split-flange tube/hose connectors utilizing 'long' mounting screws (screw size M14x75 or $^1/_2$"-13 UNC based on split-flange height as shown below).

The FV13 flushing valve kit contains the required O-rings (shown below) but no screws, split-flanges or tube/hose connectors.

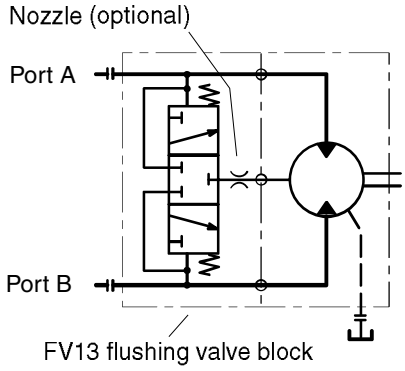

Hydraulic schematic.

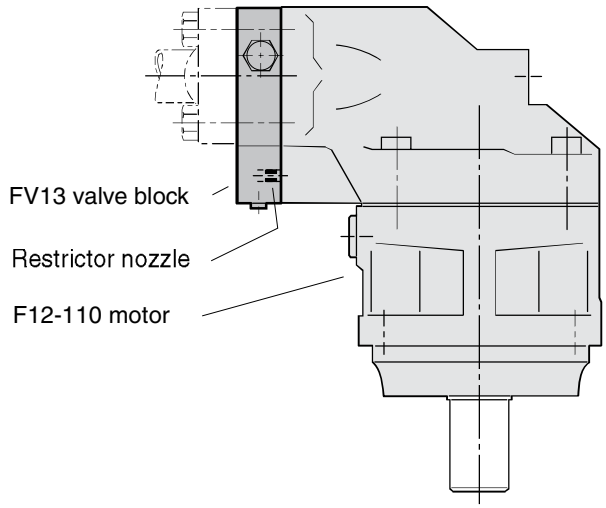

FV13 installation

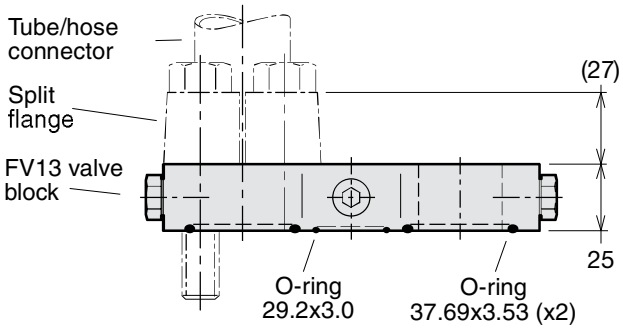

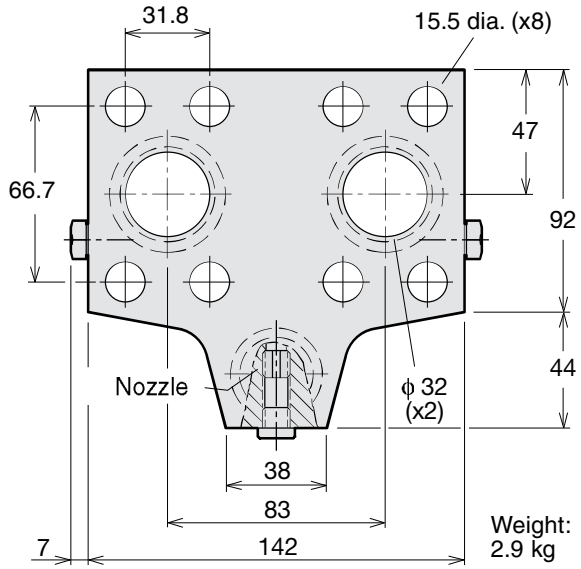

FV13 Ordering code

FV	1	3	–	H	–	A	–	L01
Valve type	Version	Size		Seals		Techn. status		Nozzel

Code	Valve type
Flushing	valve

Code	Version
1	Factory assigned

Code	Size (SAE 6000 psi)
3	$1^1/_2$" (for F12-110 / -125)

Code	Seals
H	Nitrile rubber

Code	Techn. status
A	Factory assigned

Code	Nozzel
L	Table below

FV13 restrictor nozzles

When required, a nozzle is utilized to restrict the flow through the F12-110, -125 motor case. The nozzle installs in the drilled and tapped (M10x1.0) drain line located in the valve block as shown to the left. The diagram on page 1 shows flushing flow versus differential pressure for selected orifice sizes.

The following table lists currently available nozzles and the corresponding FV13 ordering code designation.

Designation	Flushing valve Part number	Orifice size [mm]	Orifice Part number
L00 no nozzle	3780292		
L01 (std.)	3795623	1.3	379 4413
L04	3780593	1.2	379 4412
L06	3787315	1.7	379 4417
L07	3798322	2.0	379 4420

Parker Hannifin
Pump and Motor Division
Trollhättan, Sweden

General information

- The SR pressure relief/make-up valve block for series F12 and V12 motors is designed to protect the motor and the main hydraulic lines from short duration pressure spikes. The valve block also provides an excellent make-up function.
- The valve block installs directly on the motor port flange, and is available in three sizes:
  - **1** $^3/_4$" for F12-30/-40/-60, T12-60 and V12-60/-80
  - **2** 1" for F12-80, -90, T12-80 and V14-110
  - **3** $1^1/_4$" for F12-110, -125 and V14-160.
- The SR valve block consists of a housing containing two high pressure relief cartridges and two separate check valves for make-up. Cartridges are available in non-adjustable pressure settings between 280 and 420 bar *(4 000 and 6000 psi respectively)*.
- A make-up port (G) is also provided. In certain opera ting conditions, the motor (when operating as a pump) may cavitate because of insufficient inlet pressure.
  To prevent this, the G port should be pressurized. Contact Parker Hannifin for further information.
- The pressure drop through the main ports (A–A' or B–B') is low. As an example, the pressure drop on size 1 ($^3/_4$") is 0.45 bar *(6.5 psi)* at 175 l/min, and on size 2 (1") 0.7 bar *(10 psi)* at 250 l/min.

NOTE: The valve block includes main port O-rings (facing the motor) but no mounting screws.

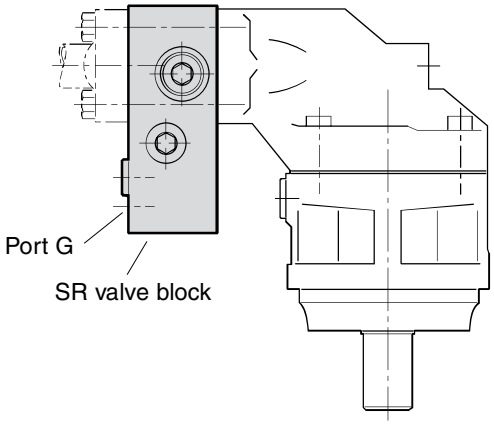

SR valve block location.

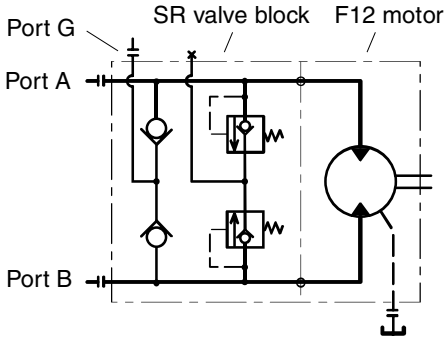

SR valve block schematic.

Ordering code

SR	1		–		/		–	00	–	H	F	–	A
Valve function	Version	Port size		Pressure settings				Serial number		Seals	Threads		Techn. status

Pressure relief/ make-up valve block

Code	Version
1	Factory assigned

Code	Port size (SAE 6000 psi)	
1	$^3/_4$"	For: F12-30, -40, -60, T12-60 and V12-60, -80
2	1"	For: F12-80, -90, T12-80 and V14-110
3	$1^1/_4$"	For: F12-110, -125 and V14-160

Code	Pressure settings (A/B ports) [bar]
280, 300, 330, 350, 380, 400 or 420	

Code	Serial number
00	Factory assigned

Code	Seals
H	Nitrile rubber

Code	Threads (port G)
F	Metric

Code	Techn. status
A	Factory assigned

Parker Hannifin
Pump and Motor Division
Trollhättan, Sweden

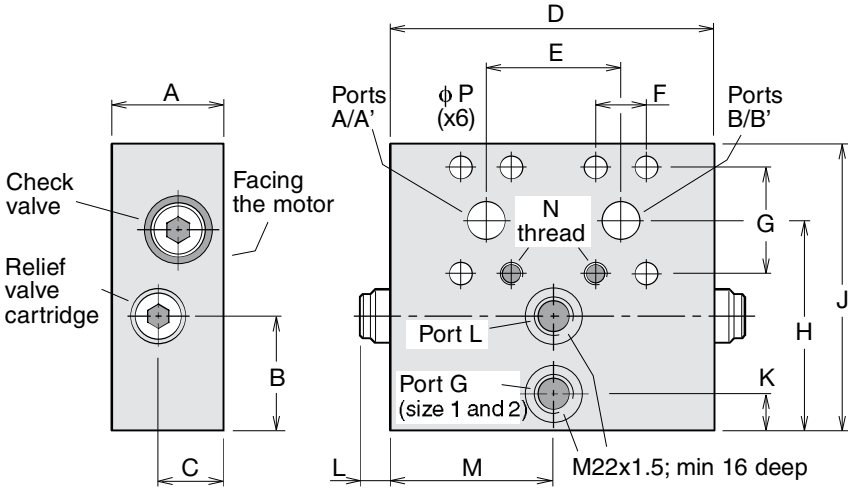

Dim. [mm]	Size 1 ($^3/_4$")	Size 2 (1")	Size 3 ($1^1/_4$")
A	55	57	57
B	55	55	25
C	32	32	26
D	157	160	160
E	66	75	83
F	23.8	27.8	31.8
G	50.8	57.15	66.7
H	103	109	88
J	140	150	135
K	18	18	-
L	16	16	16
M	78.5	80	-
N	M10 x18	M12 x20	M14 x23
P	11	13	15.5

Weight [kg]	Size 1 ($^3/_4$")	Size 2 (1")	Size 3 ($1^1/_4$")
	7.4	9.1	8.5

SV pressure relief valve

General information

- The SV pressure relief valve block for series F12 and V12 motors is designed to protect the motor and adjacent hydraulic components from short duration pressure peaks.
- It installs directly on the motor port flange and is available in three sizes:
  - '1': $^3/_4$" for F12-30/-40/-60, T12-60 and V12-60/-80
  - '2': 1" for F12-80/ -90, T12-80 and V14-110
  - '3': $1^1/_4$" for F12-110/-125 and V14-160
- The valve block consists of a housing containing two high pressure relief cartridges with anti-cavitation function. Cartridges are available in non-adjustable pressure settings between 280 and 420 bar.
- A make-up/drain port, **L**, is also provided. In certain operating conditions the motor may cavitate because of in-sufficient inlet pressure. To prevent this, the L port can be pressurized. When there is a risk of over-heating, the L port can also be utilized to take out part of the flow for cooling. Contact Parker Hannifin for further information.
- The pressure drop through the main ports (A–A' or B–B') is low. As an example, the pressure drop on size 1 ($^3/_4$") is 0.45 bar *(6,5 psi)* at 175 l/min *(45 gpm)*, and on size 2 (1") 0.7 bar *(10 psi)* at 250 l/min *(65 gpm)*.

NOTE: - The valve block includes main port O-rings (facing the motor) but no mounting screws.
- The valve blocks can be used on all versions of series F12 as well as V12 and T12 motors.

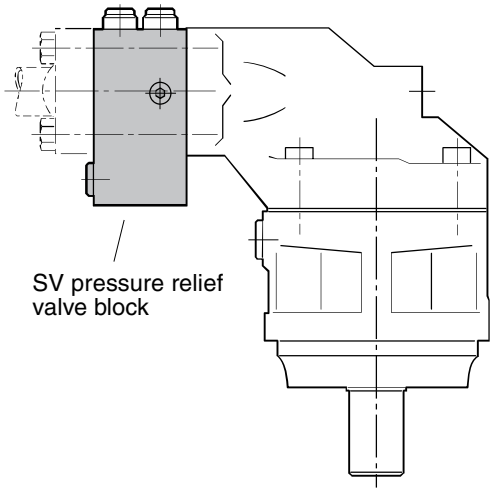

SV valve block installed on an F12 motor.

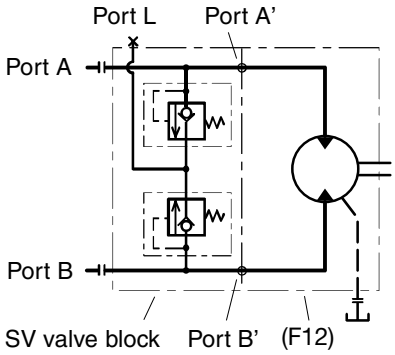

Hydraulic schematic.

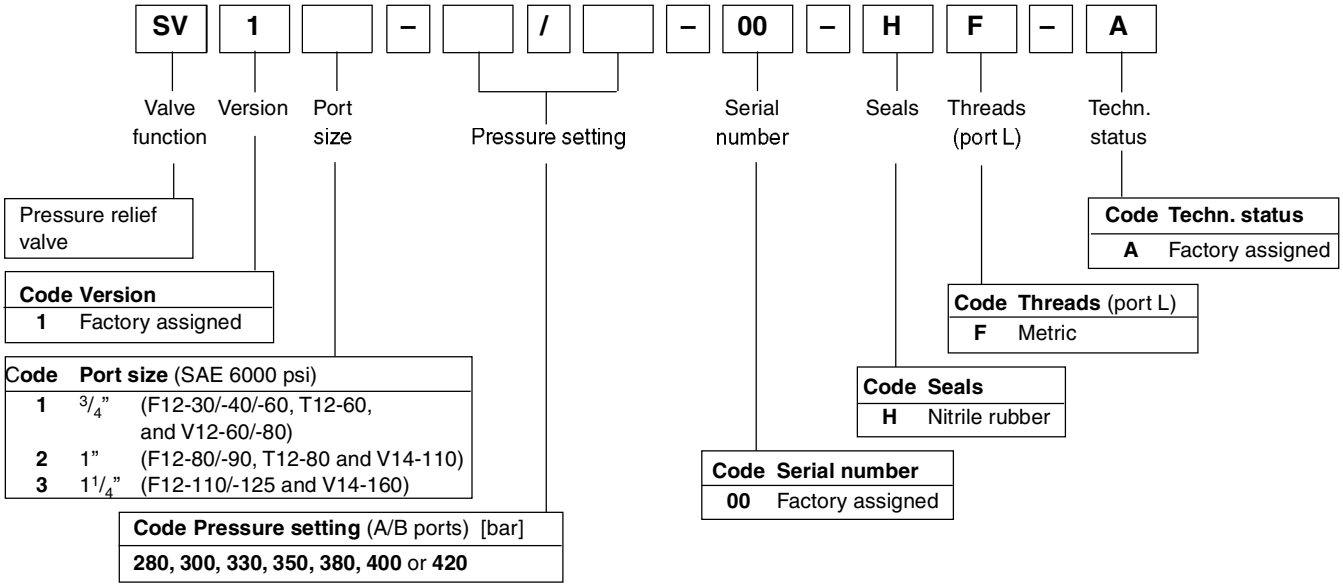

Installation

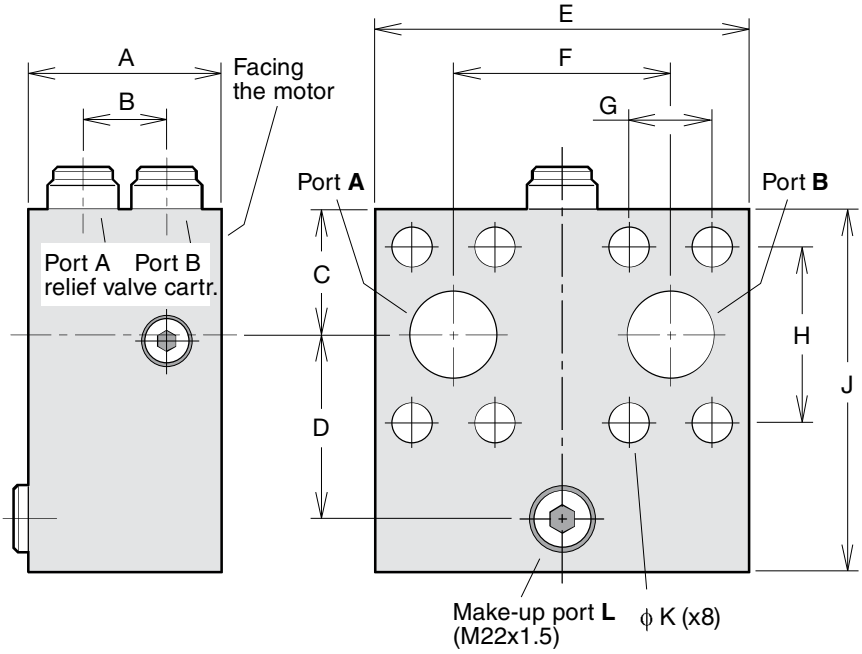

Dim. [mm]	SV11	SV12	SV13
A	71	73	73
B	31	31	31
C	36	41	47
D	47	51	68
E	130	127	142
F	66	75	83
G	23.8	27.8	31.8
H	50.8	57.2	66.7
J	99	109	135
K	11	13	15.5
Weight [kg]	4.2	5.0	6.7

The SP, super shockless, pressure relief/make-up valve block for series F12 motors is designed mainly for protection of the swing function of an excavator. It features a very 'soft' relief characteristic with very little overshoot and an excellent make-up function.

The pressure/time diagram to the right is a recording of an actual start-brake sequence of an excavator swing function. In the left part ('Start'), port A is pressurized and the swing is accelerating; the pump pressure is limited by the relief valve setting.

In the right part ('Brake'), port B is pressurized (as deter-mined by the relief valve setting), and the swing movement stops.

The valve block installes directly on the motor port flange, and is available in three sizes:

SP11 $^3/_4$" for F12-30/-40/-60

SP12 1" for F12-80/-90

SP13 $1^1/_4$" for F12-110/-125

The SP valve consists of a valve block containing two high pressure relief cartridges and two separate check valves for make-up; refer to the split view below.

Cartridges are available in five non-adjustable pressure settings between 190 and 315 bar.

A make-up port (G) is also provided. In certain operating conditions, the motor (when operating as a pump) may cavitate because of insufficient inlet pressure. To prevent this, the G port should be pressurized.

Contact Parker Hannifin, for further information.

NOTE: The valve block includes main port O-rings (facing the motor) but no mounting screws.

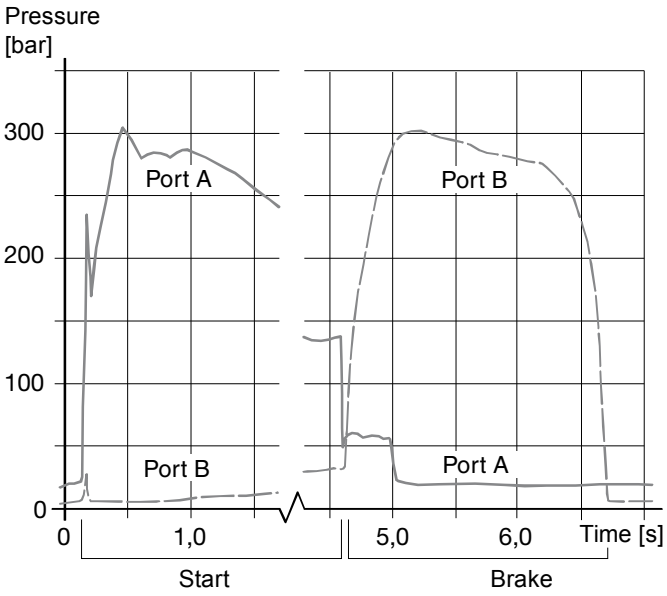

Pressure/time diagram (example).

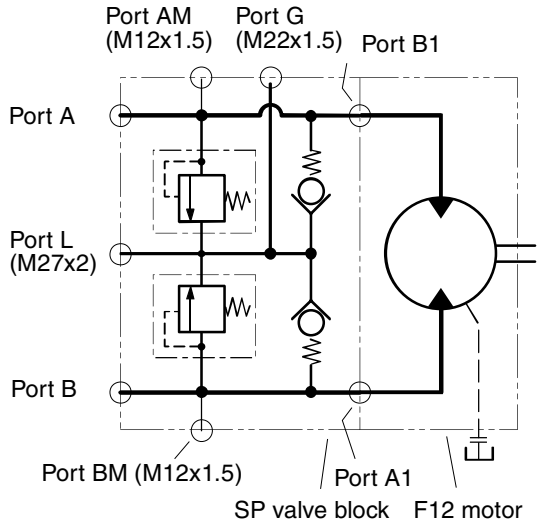

SP/F12 schematic.

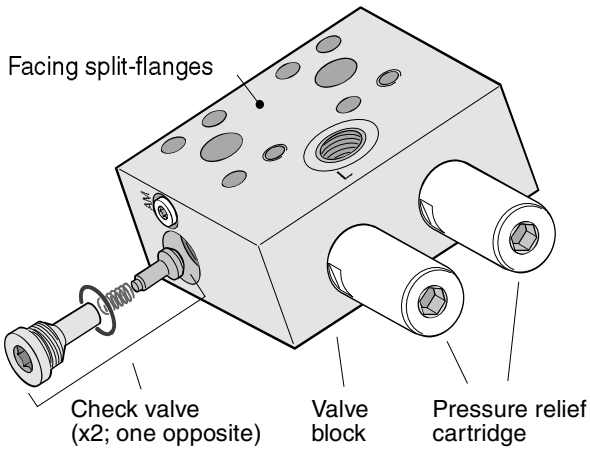

SP valve components.

SP	1		–		/		–	00	–	H	F	–	A

Valve function — Version — Port size — Pressure setting — Serial number — Seals — Threads (port. G) — Techn. status

Pressure relief/ make-up valve

Code	Version
1	Factory assigned

Code	Port size (SAE 6000 psi)	
1	$^3/_4$"	(F12-30, -40, -60)
2	1"	(F12-80, -90)
3	$1^1/_4$"	(F12-110, -125)

Code	Pressure setting (A and B ports) [bar]
190, 220, 250, 285 or 315	

Code	Serial number
00	Factory assigned

Code	Seals
H	Nitrile rubber

Code	Threads (port G)
F	Metric

Code	Tech. status
A	Factory assigned

SP valve installation

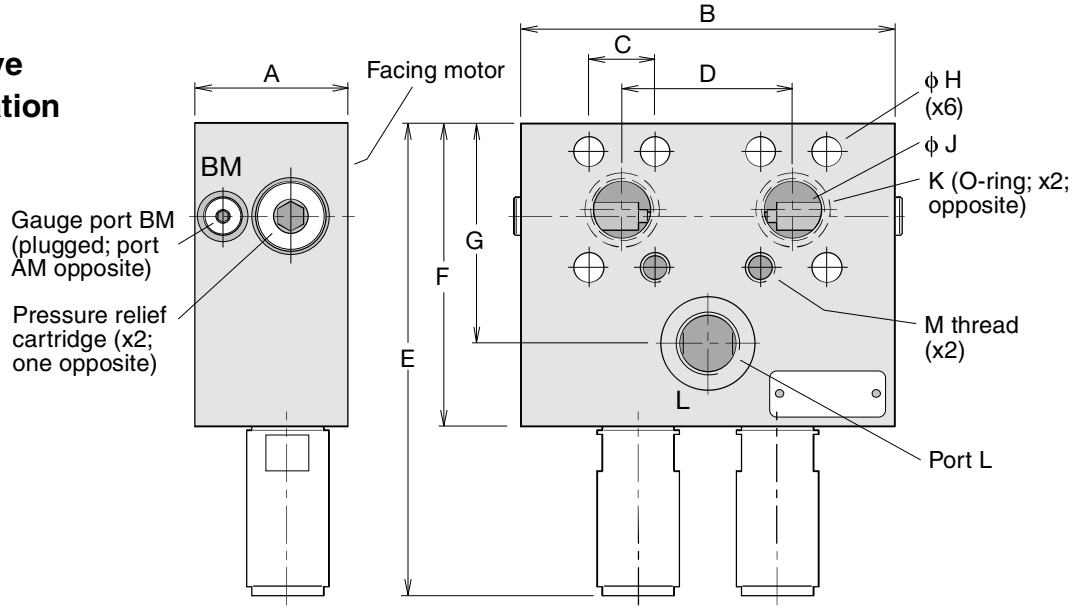

Installation dimensions (refer to the illustration)

Valve type	For F12-30/-40/-60	For F12-80/-90	For F12-110/-125
A	63	66	70
B	156	160	160
C	23.8	27.8	31.8
D	66	75	83
E	207	207	225
F	133	133	151
G	97	97	115
H	11	13	15
J	$^3/_4$"	12	$1^1/_4$"
K	24.99x3.53	32,93x3.53	37.69x3.53
M	M10 (20 deep)	M12 (20 deep)	M14 (26 deep)
Art. No	0686 371 810	0663 918 801	0663 919 101

Valve assembly part numbers

For motor type	Pressure setting [bar] at 20 l/min[1)] 190	220	250	285	315
F12-30/ -40/-60	376 6320	376 7157	376 4631	376 3675	376 3674
F12-80/ -90	376 7161	376 7158	376 6924	376 3678	376 3677
F12-110/ -125	376 7162	376 7159	376 7163	376 7164	376 3679

1) Setting within ±10 bar

Pressure relief cartridges

Cartridge type	Pressure setting [bar] at 20 l/min[1)] 190	220	250	285	315
Spare part number	376 4610	376 7156	376 4632	376 3824	376 3825

Speed sensor

A speed sensor kit is available for series F11/F12. A ferrostat differential (Hall-effect) sensor installs in a separate, threaded hole in the F11/F12 bearing housing.

On F12 the speed sensor is directed towards the ring gear. On F11 the speed sensor is directed towards the pistons. The sensor output is a 2 phase shifted square wave signal within a frequency range of 0 Hz to 15 kHz.

NOTE:
- The motor bearing housing must be prepared for the speed pick-up; refer to the F11/F12 ordering codes (pages 7-12).
- On F11 **the pistons position must be known before mounting**.
- Additional information is provided in the Instruction (catalogue HY30-8301/UK).
- The speed sensor is also shown in the illustrations on pages 19, 20, 23, 24, 26, 27, 30, 32, 34 and 36

Part number for Speed sensor is 378 5190.

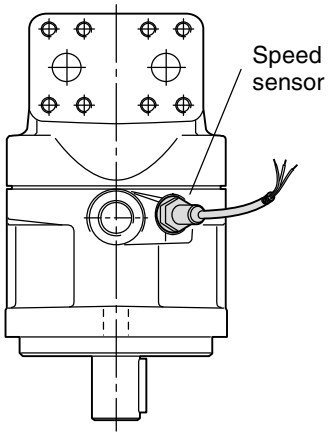

F12 with speed sensor.

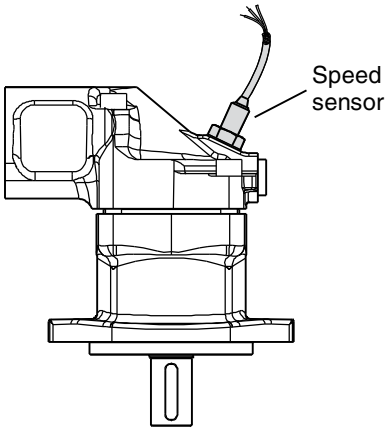

F11-14 with speed sensor.

Direction of rotation
The M and H versions of series F11, and the M version of series F12, are bi-directional.

The L and R pump versions are uni-directional, allowing higher selfpriming speeds (refer to page 16).

The illustration to the right shows direction of flow versus shaft rotation. In a motor application, the shaft turns clockwise when port **B** (black arrow) is pressurized, and counter clockwise when port **A** (open arrow) is pressurized.

In a pump application where the shaft turns clock-wise, port B is the inlet port and should be connected to tank; when the shaft turns counter clockwise, port A is the inlet port.

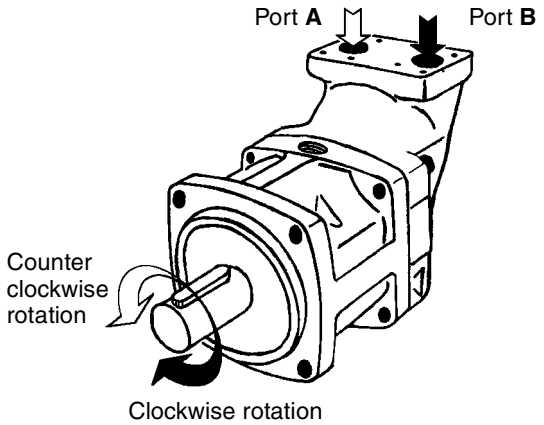

NOTE:
When operating the F11/F12 as a pump above the selfpriming speed (valid for both the pump and motor versions), the inlet must be sufficiently pressurized. Increased noise and deteriorating performance may otherwise be experienced.

For further information refer to 'Selfpriming speed and required inlet pressure' on page 6.

Hydraulic fluids
Ratings and performance data for series F11/F12 are based on operating with good quality, contamination-free, petroleum-based fluids.

Hydraulic fluids type HLP (DIN 51524), automatic transmission fluids type A, or API CD engine oils can be used.

Fire resistant fluids (when used under modified operating conditions) and synthetic fluids may also be suitable.

For additional information, refer to Hydraulic Marketing Information System data base:

- Hydraulic fluid specifications
- Fire resistant fluids.

Operating temperature
The following temperatures should not be exceeded (type **N** shaft seals):

Main circuit 70 °C

Drain circuit: 90 °C.

FPM shaft seals (type **V)** can be used to 115 °C drain fluid temperature.

NOTE: The temperature should be measured at the utilized drain port.

Continuous operation may require case flushing in order to meet the viscosity and temperature limitations.

The following table shows operating speeds, above which flushing is usually required, as well as suggested flow through the case.

Series F11

Frame size	Speed [rpm]	Flow [l/min]
F11-5	5500	1-2
F11-6	4500	2-3
F11-10	4500	2-3
F11-12	4500	2-3
F11-14	4500	2-3
F11-19	4000	2-4

Series F12

Frame size	Speed [rpm]	Flow [l/min]
F12-30	3500	4–8
F12-40	3000	5–10
F12-60	3000	7–14
F12-80	2500	8–16
F12-90	2500	8–16
F12-110	2300	9–18
F12-125	2300	9–18
F12-150	2200	10-20
F12-250	1800	12-22

F11/F12 in series operation
When running F11/F12 in series at higher pressure levels,

Please contact Product Support, Pump and Motors in Trollhättan for further information.

Viscosity
The ideal operating range is15 to 30 mm^2/s [cSt].
At operating temperature, the viscosity (of the drain fluid) should be kept above 8 mm^2/s [cSt].
At start-up, the viscosity should not exceed 1000 mm^2/s [cSt]

Filtration
To obtain the highest service life of the F11/F12, the fluid cleanliness should meet or exceed ISO code 20/18/13 (ISO 4406).

During normal operating conditions, a 10 µm (absolute) filter is recommended.

Case pressure
The service life of the shaft seal ring is affected by the speed of the motor and the case drain pressure and it can decrease with an increase in the frequency of pressure peaks.

Note, seal life can be shorter at unfavourable operating conditions (high temperature, low oil viscosity, contaminated oil).

The diagram below show the highest recommended case pressure as a function of shaft speed.

The case pressure must be equal to or greater than the external pressure on the shaft seal ring.

Serie F11

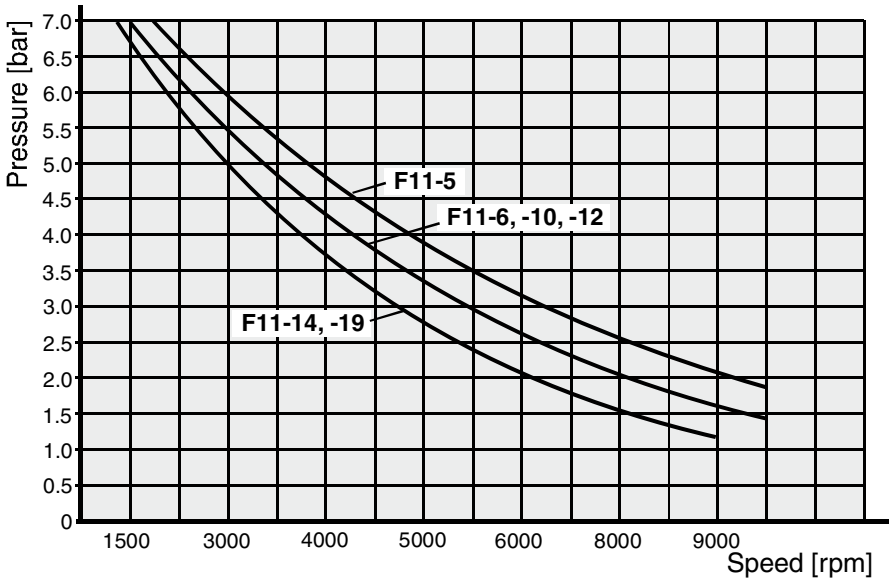

Valid for V seal, for other seals, please contact Parker Hannifin

Serie F12

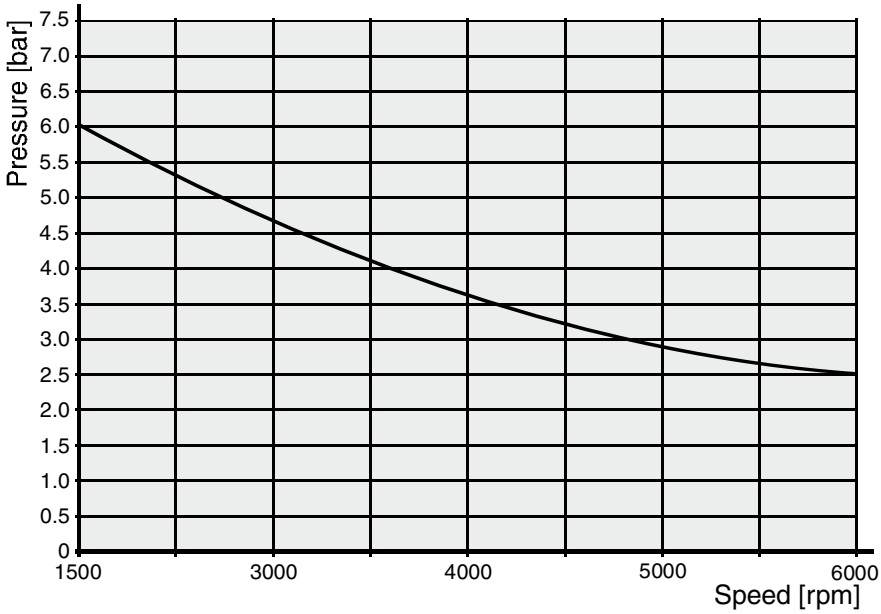

Valid for V seal, for other seals, please contact Parker Hannifin

Case drain connections
Series F11/F12 have two drain ports, **C** and **D**, while F12-110 and -125 have an additional port, **E**.

The uppermost drain port (such as port C in the illustration below) should always be utilized.

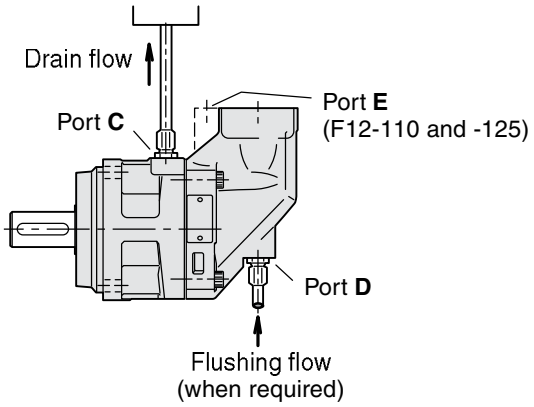

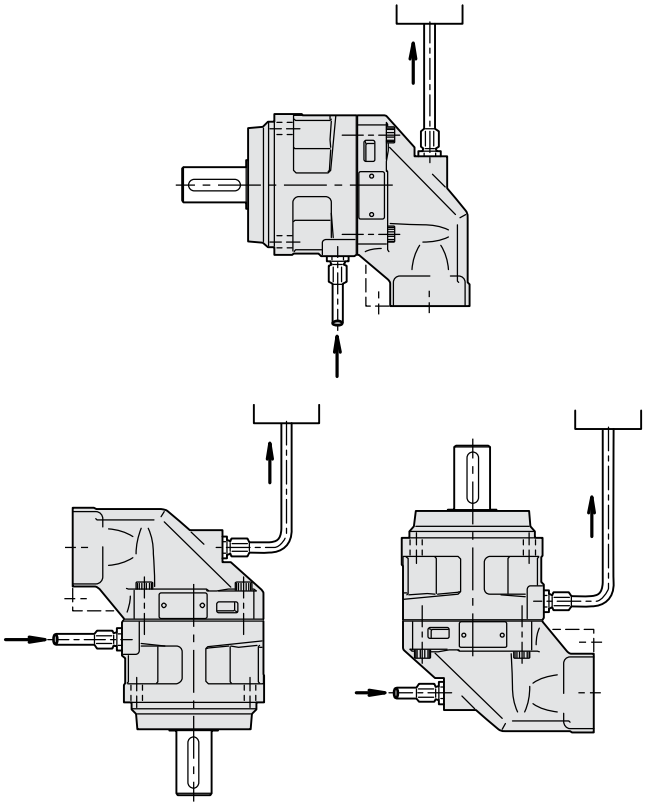

In mounting positions such as 'shaft up' (below) a spring loaded check valve should be installed in the drain line in order to insure a sufficiently high oil level in the case.

Preferably, the drain line should be connected directly to the reservoir.

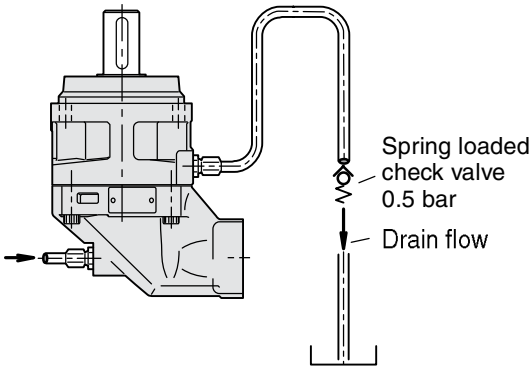

Before start-up
Make sure the F11/F12 case as well as the entire hydraulic system is filled with a recommended fluid.

The internal leakage, especially at low operating pressures, is *not* sufficient to provide lubrication at start-up.

NOTE:
- To avoid cavitation and obtain a low noise level as well as reduced heat generation, tubes, hoses and fittings must be adequately dimensioned.
- Preferably, the suction line flow speed should be 0.5 to 1 m/s, and pressure line flow speeds 3 to 5 m/s.

⚠ WARNING – USER RESPONSIBILITY

FAILURE OR IMPROPER SELECTION OR IMPROPER USE OF THE PRODUCTS AND/OR SYSTEMS DESCRIBED HEREIN OR RELATED ITEMS CAN CAUSE DEATH, PERSONAL INJURY AND PROPERTY DAMAGE.

This document and other information from Parker-Hannifin Corporation, its subsidiaries and authorized distributors provide product or system options for further investigation by users having technical expertise.

The user, through its own analysis and testing, is solely responsible for making the final selection of the system and components and assuring that all performance, endurance, maintenance, safety and warning requirements of the application are met. The user must analyze all aspects of the application, follow applicable industry standards, and follow the information concerning the product in the current product catalog and in any other materials provided from Parker or its subsidiaries or authorized distributors.

To the extent that Parker or its subsidiaries or authorized distributors provide component or system options based upon data or specifications provided by the user, the user is responsible for determining that such data and specifications are suitable and sufficient for all applications and reasonably foreseeable uses of the components or systems.

Offer of Sale

Please contact your Parker representation for a detailed ”Offer of Sale”.

Parker Hannifin
Pump and Motor Division
Trollhättan, Sweden